BETTER HOME PRODUCTS

ASSEMBLY INSTRUCTIONS

WCP-600

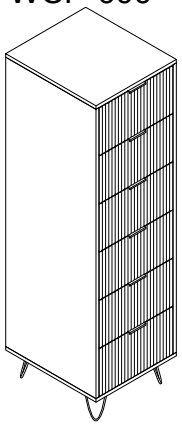

Hardware List			
A			34 pcs
B			34 pcs
C			10 pcs
D		4x35mm	29 pcs
E		3x12mm	84 pcs
F			12 pcs
G		4x14mm	17 pcs
H			6 pcs
J		3x14mm	8 pcs
K			8 pcs
L			1 pcs
M			1 pcs

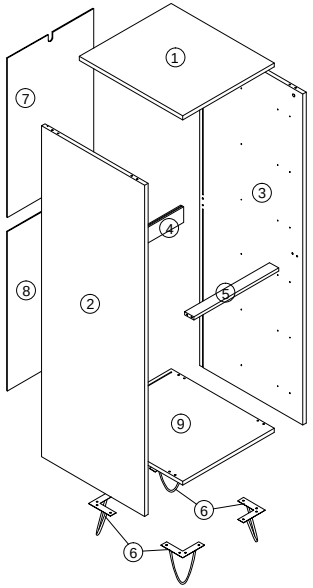

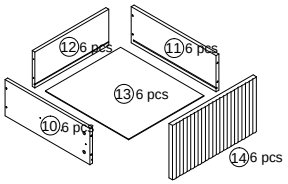

Parts List	
1	1 pcs
2	1 pcs
3	1 pcs
4	1 pcs
5	1 pcs
6	4 pcs
7	1 pcs
8	1 pcs
9	1 pcs
10	6 pcs
11	6 pcs
12	6 pcs
13	6 pcs
14	6 pcs

STEP1

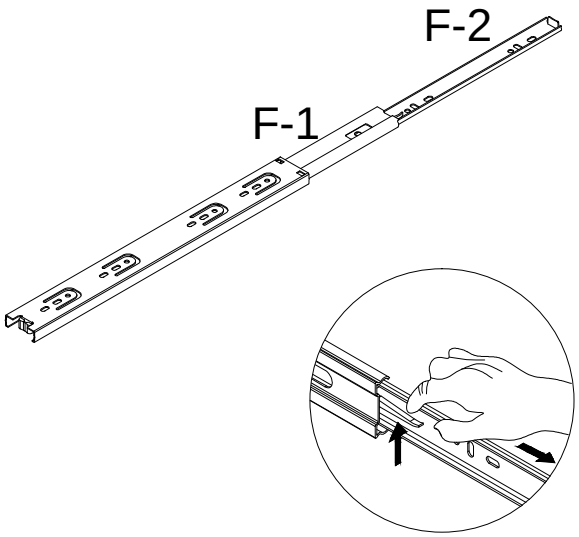

STEP2

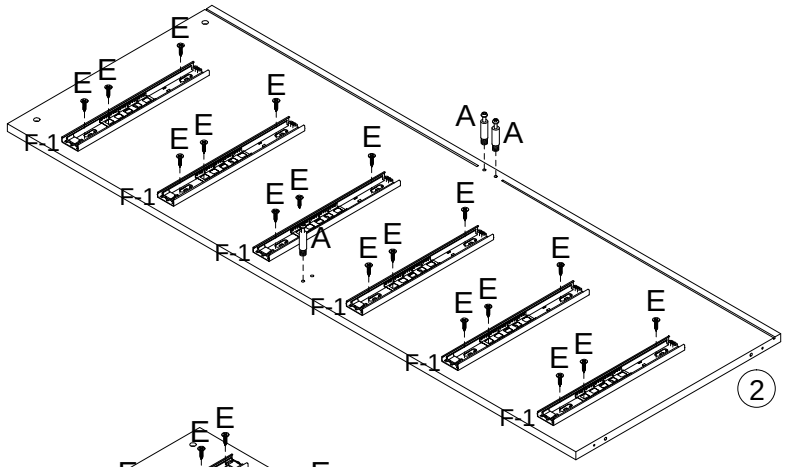

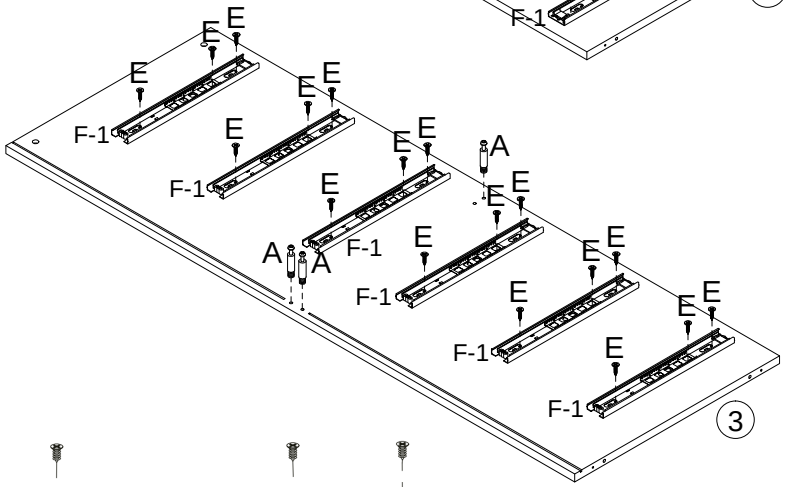

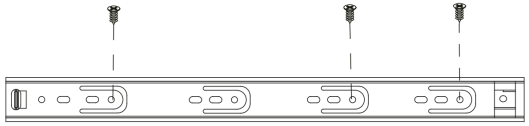

A		6 pcs
E		36 pcs
F		12pcs

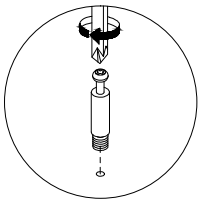

STEP3

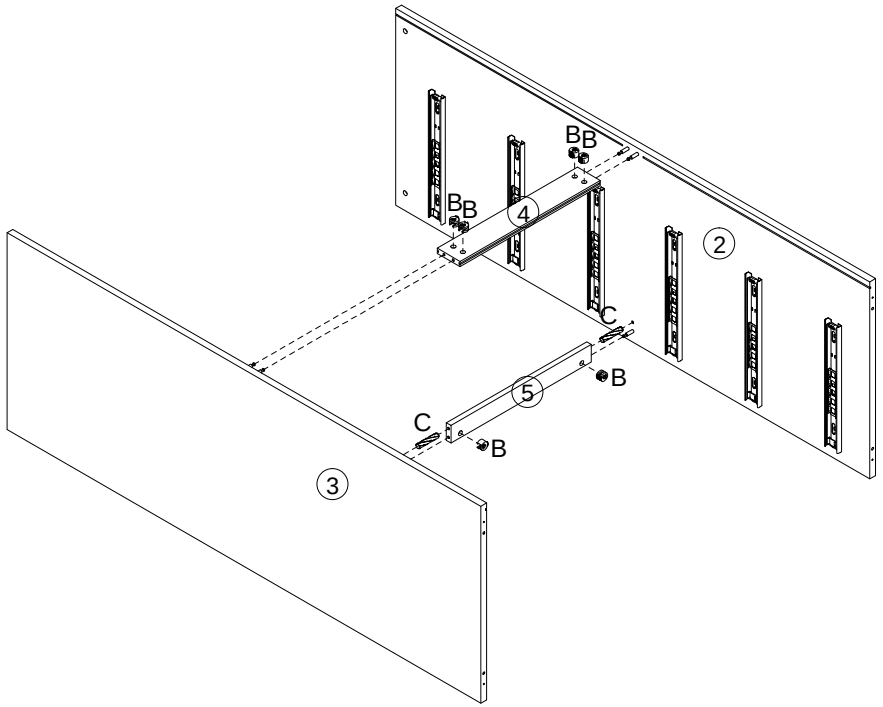

B		6 pcs
C		2 pcs

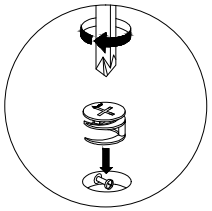

STEP4

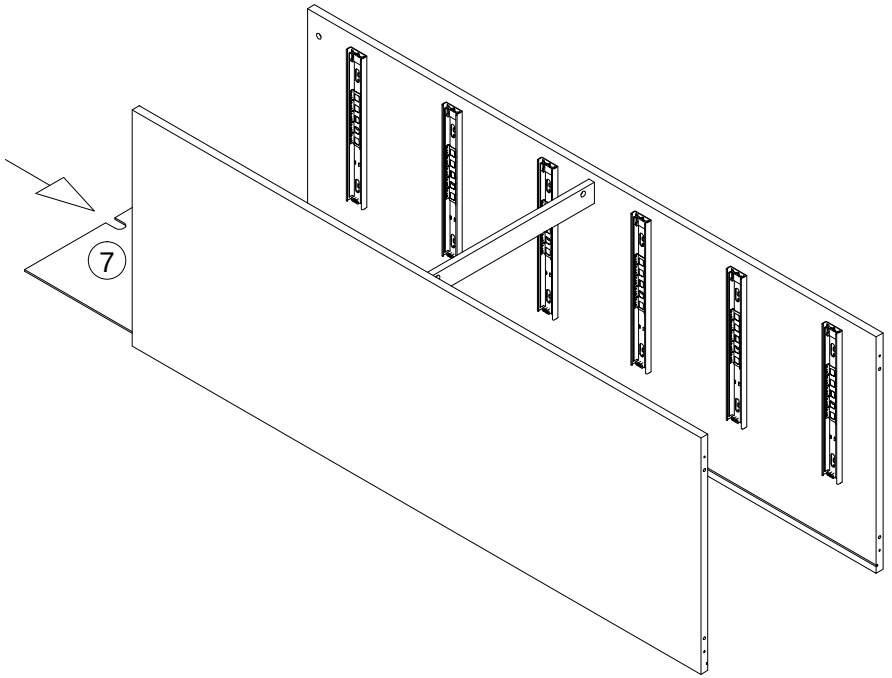

STEP5

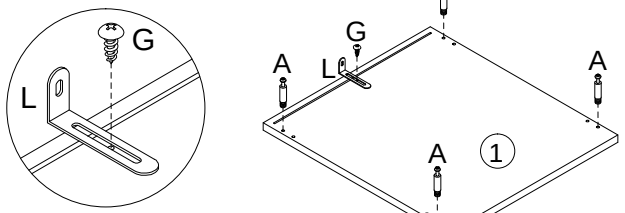

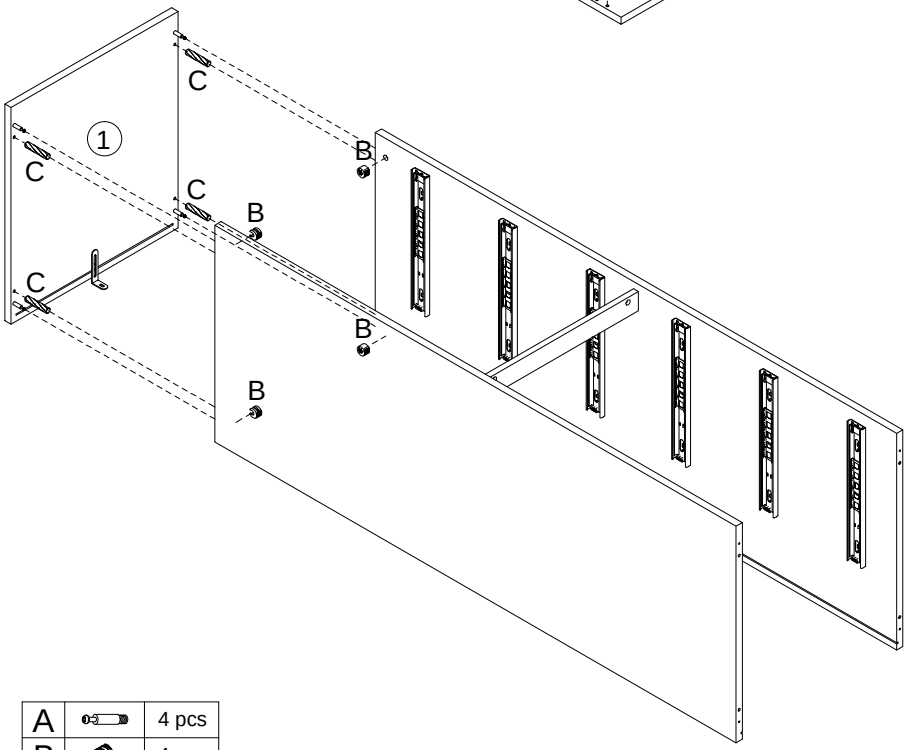

A		4 pcs
B		4 pcs
C		4 pcs
G		1 pcs
L		1 pcs

STEP6

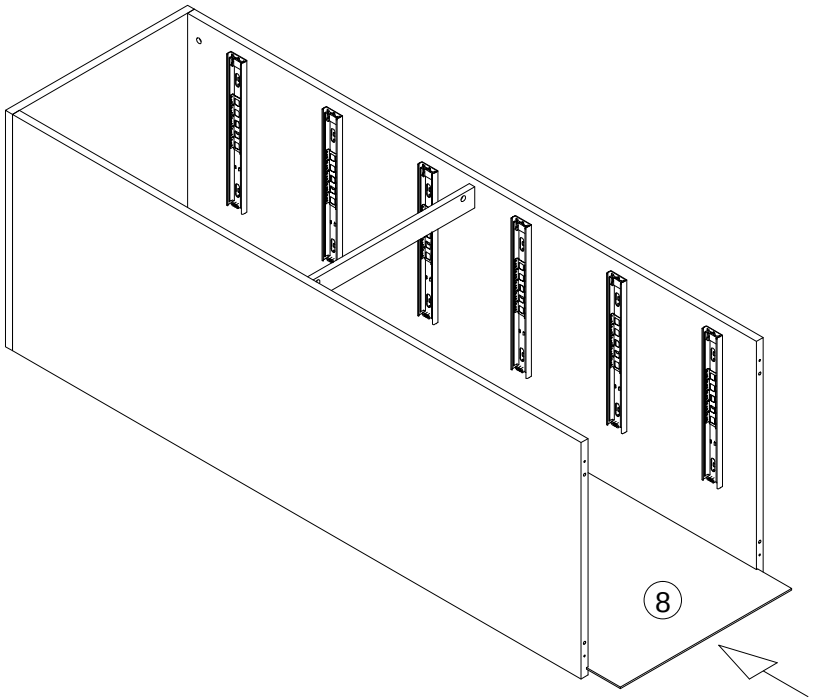

STEP7

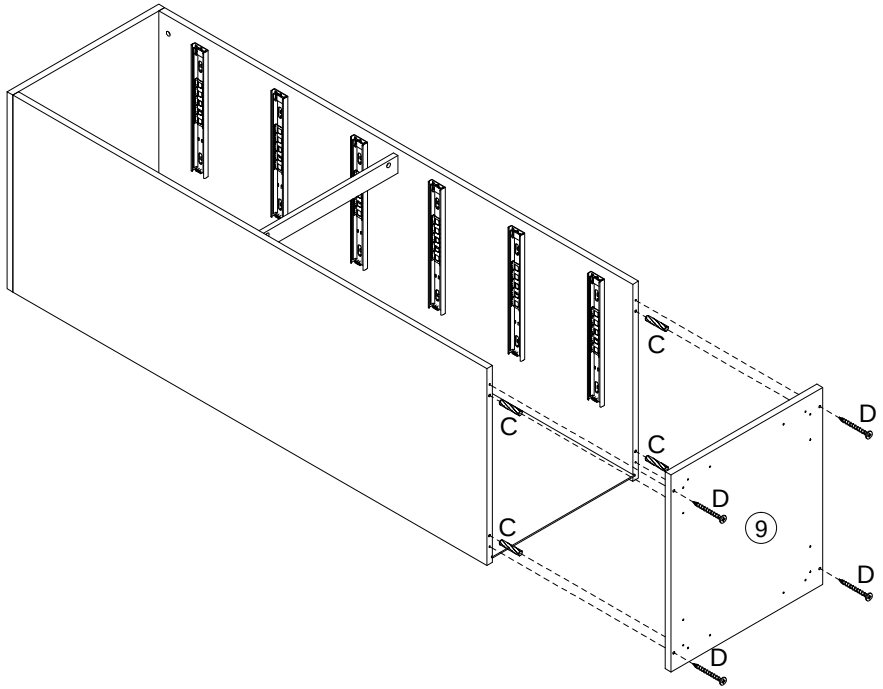

C		4 pcs
D		4 pcs

STEP8

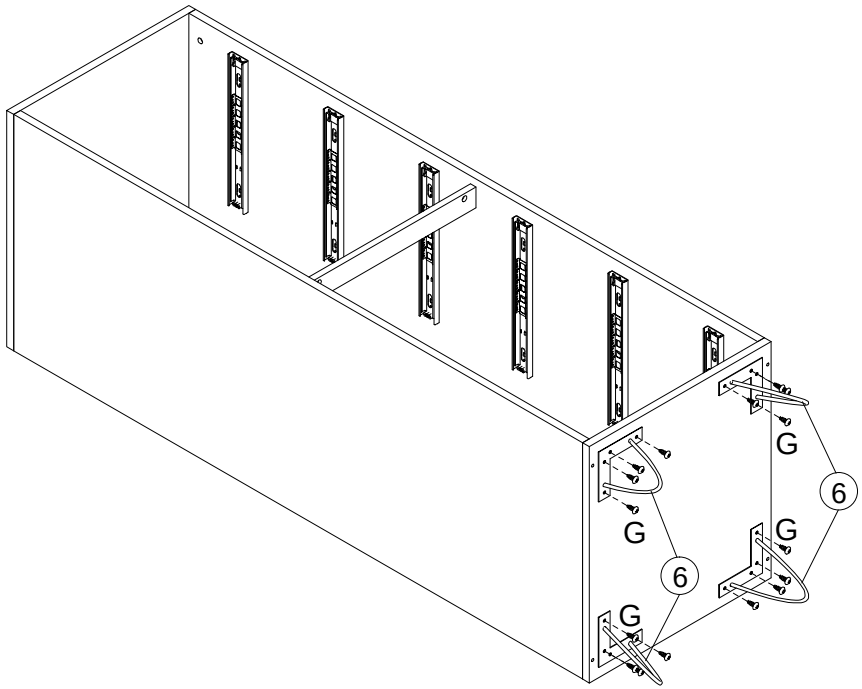

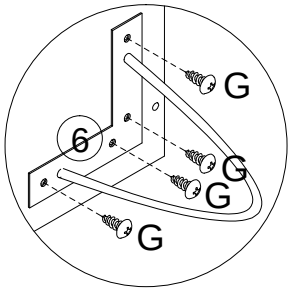

G		16 pcs

STEP9

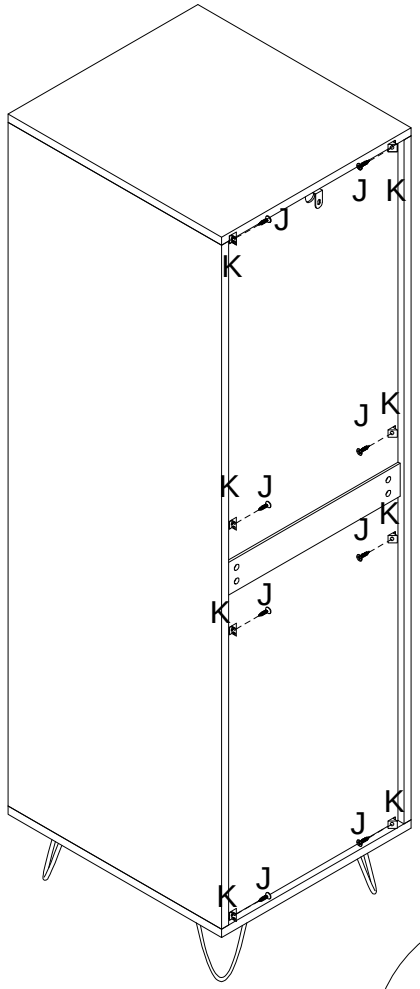

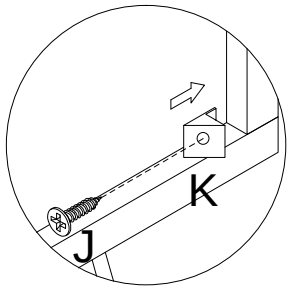

J		8 pcs
K		8 pcs

STEP10

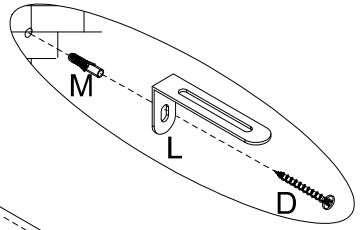

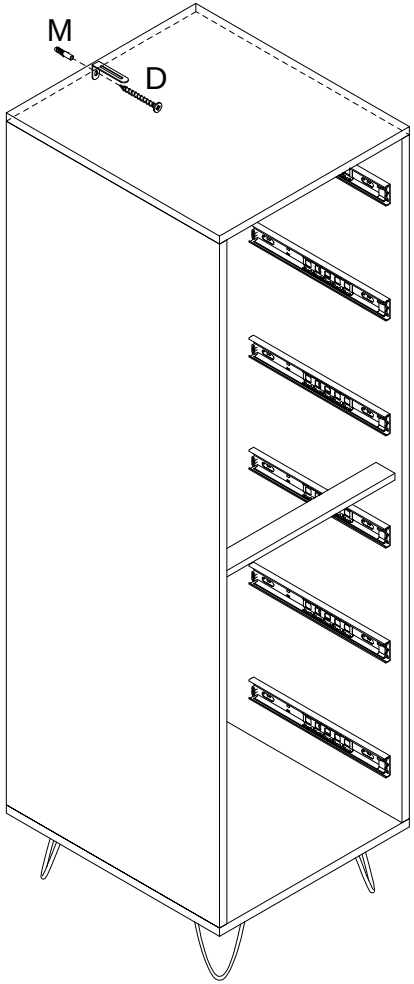

D		1 pcs
M		1 pcs

STEP11

x6

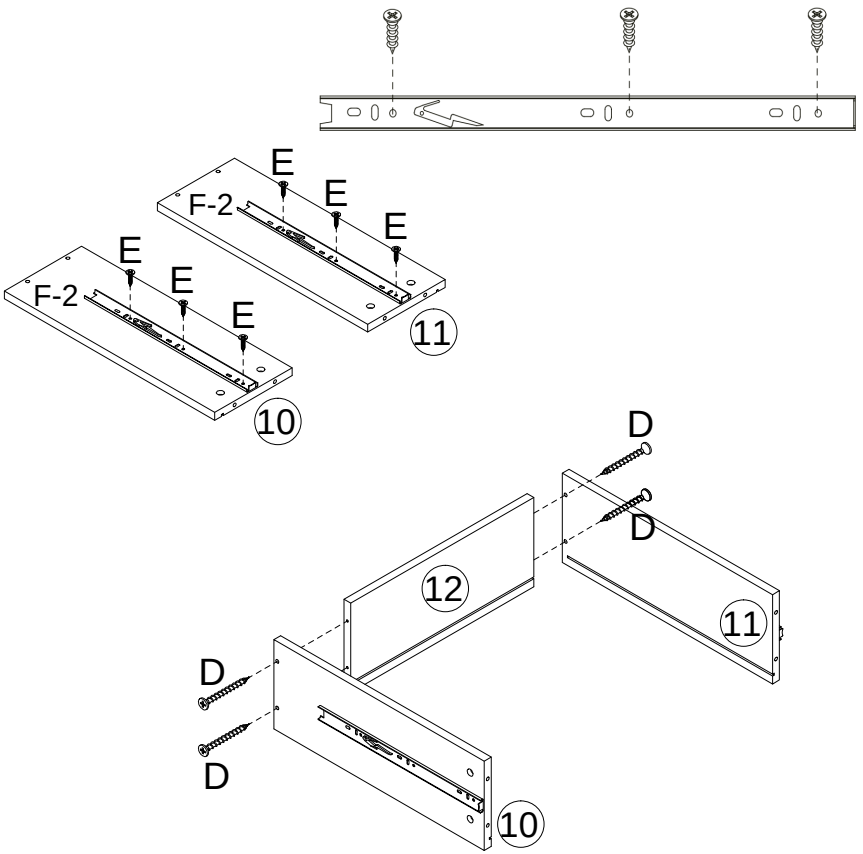

D		24 pcs
E		36 pcs
F		12pcs

STEP12

x6

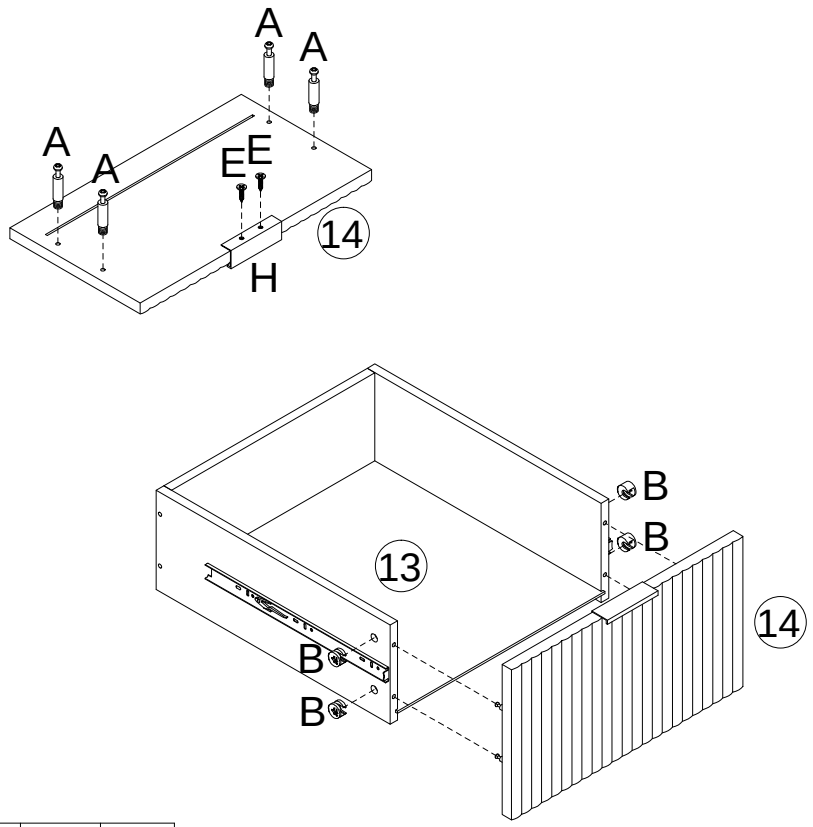

A		24 pcs
B		24 pcs
E		12 pcs
H		6 pcs

STEP13

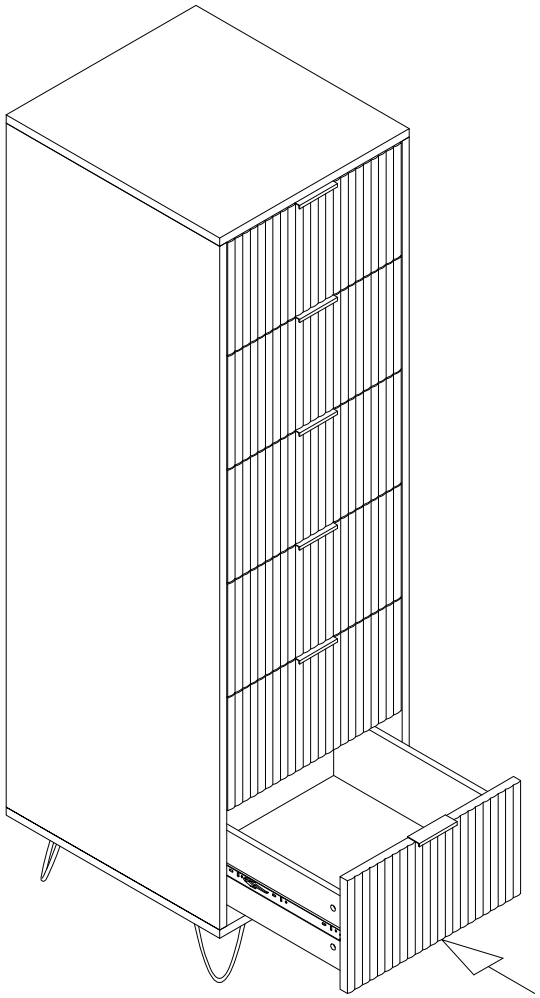

THANK YOU

We hope you enjoy your new purchase.

We have personally inspected this product.

In the event that you need any additional help for any reason,

Please do not hesitate to contact use at: 973-473-5068

Email maria@better-homeproducts.com

See our website Woodpeckers-furniture.com

Better Home Products
323 Cortland Street
Belleville New Jersey

Thank you