BED FRAME

afifurnishings.com

QUEEN

ASSEMBLY INSTRUCTIONS

Before assembling your bed frame, please read through these instructions carefully and familiarize yourself with the different parts.

ATTENTION! If you receive a damaged or defective item, please contact afifurnishings at customerservice@afifurnishings.com or 1-800-955-3726

PARTS LIST

1	SIDE RAILS	2 PCS
2	SLAT KIT	2 SET
3	SUPPORT RAIL	2 PCS
4	P SUPPORT LEGS	4 PCS
5	L SUPPORT LEGS	4 PCS

HARDWARE

- A JCB M6 X 30mm (1 1/8") - 6 pcs
  Spare - 1 pc
- B Cap Nut - 6 pcs
- C JCB M8 X 40mm (1 5/8") - 4 pcs
  Spare - 1 pc
- D Wood screw(1 1/4") - 12 pcs
  Spare - 1 pc
- E Split Washer - 4 pcs
  Spare - 1 pc
- F Flat Washer - 4 pcs
  Spare - 1 pc
- G Allen wrench M4 - 1pc
  Spare - 1pc
- H Allen wrench M5 - 1pc

NOTE: WE INCLUDE SPARE HARDWARE IN CASE DAMAGE OCCURS DURING ASSEMBLY.

Step 1

Attach side rails (1) to the headboard and footboard. For assembly, follow the assembly instructions included with your headboard and footboard.

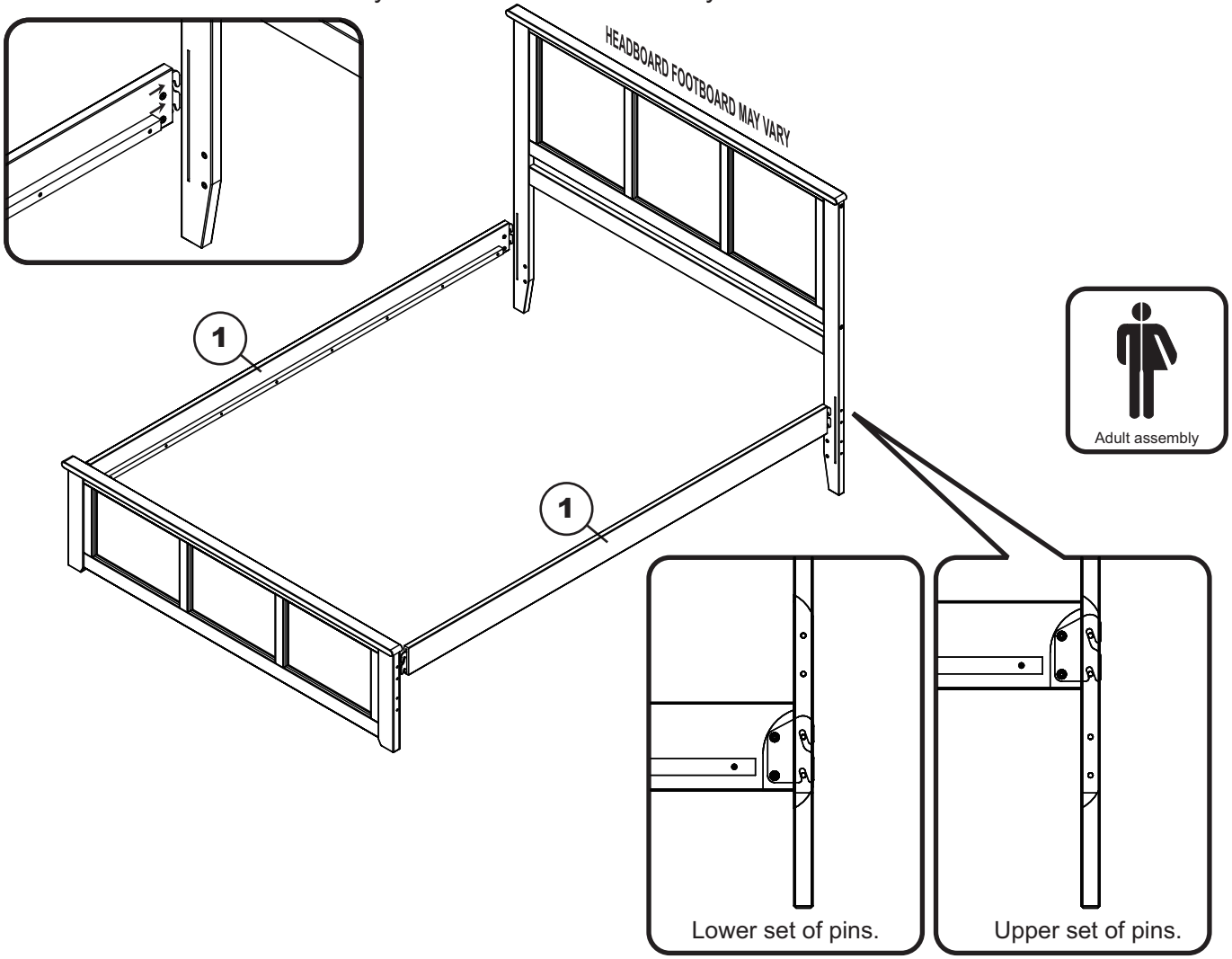

PO:

CODE	ITEM
FR-UBN2-LPM	R-26554X

QUEEN

Step 2 Attach support legs (4) or (5) to support rail (3) as shown below. Using JCB M8 (C) split and flat washer (E)(F) tighten with Allen wrench M5 (H). Repeat the other.

NOTE :
-Using P Support Leg for Platform Bed.
-Using L Support Leg for Lower Bed.

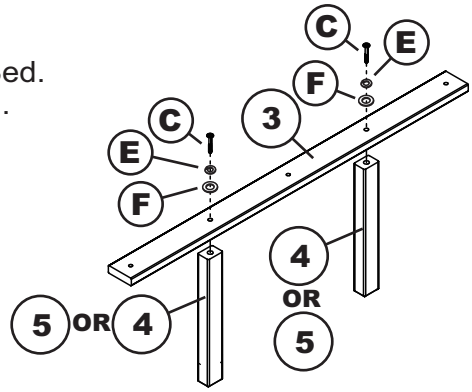

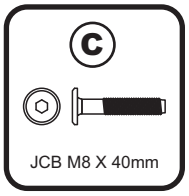

Step 3 Attach support rail (3) to the slat kit (2) as shown below. Using JCB M6 X 30mm (A) and cap nut (B). Tighten with Allen wrench M4 (G).
Using wood screw (D) tighten with Phillips head svcrewdriver. (Customer supplied)

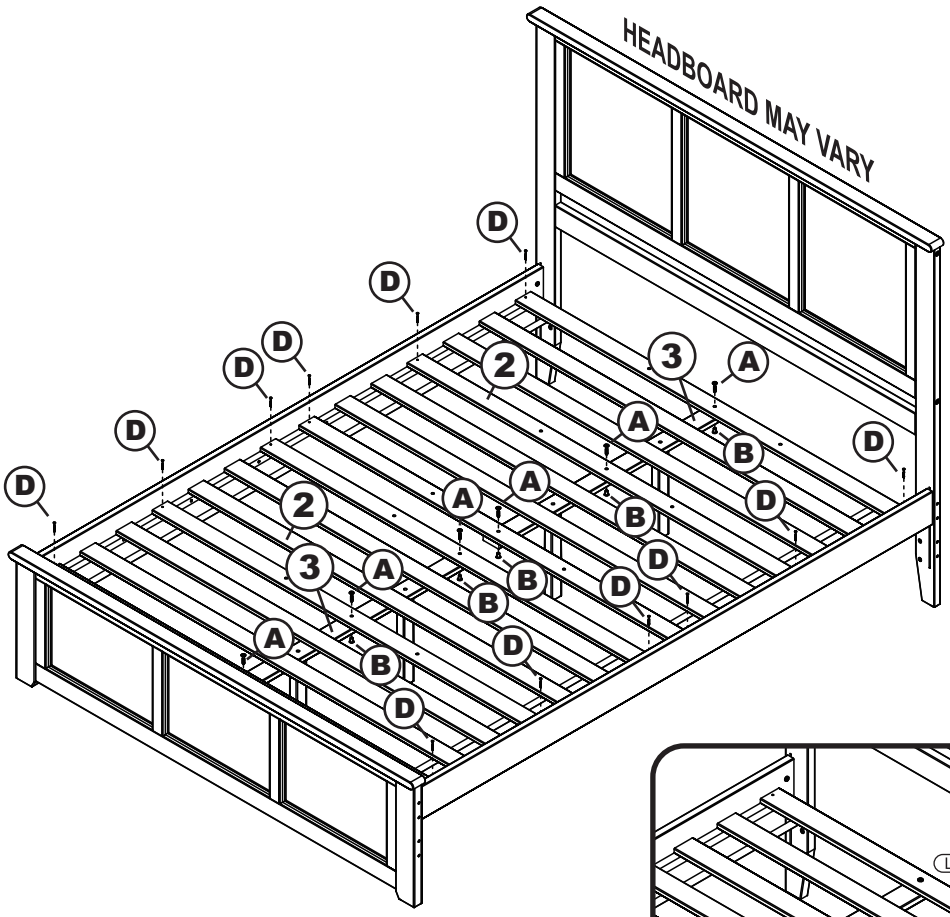

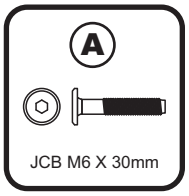

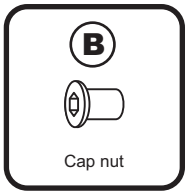

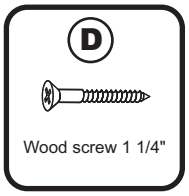

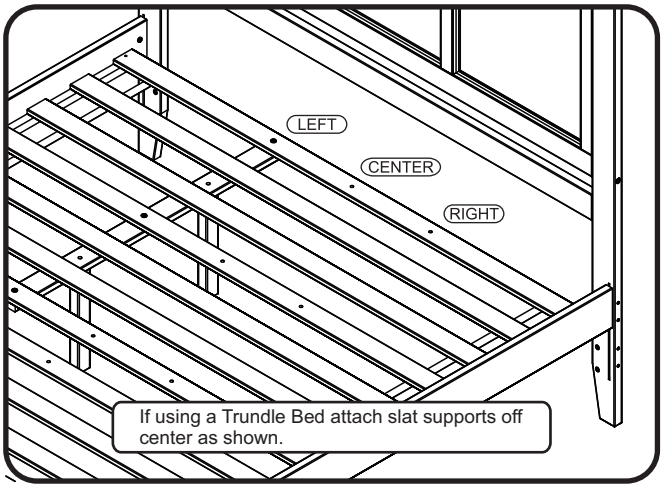

Congratulations!

Your bed is now ready for use.

We recommend that you periodically recheck that all screws are tight to ensure lasting safety.

HEADBOARD

afifurnishings.com

ASSEMBLY INSTRUCTIONS

Before assembling your headboard, please read through these instructions carefully and familiarize yourself with the different parts.
ATTENTION! If you receive a damaged or defective item, please contact afifurnishings at customerservice@afifurnishings.com or 1-800-955-3726

READY TO ASSEMBLE

PARTS LIST

1	HEADBOARD PANEL	1 PC
2	LEFT LEG	1 PC
3	RIGHT LEG	1 PC
4	PILLOW STOP	1 PC

Instructions apply for bed sizes
QUEEN > KING

HARDWARE

A JCB M6 X 110mm (4 3/8") - 4 pcs
Spare - 1 pc

B Barrel nut - 4 pcs
Spare - 1 pc

F Allen wrench - 1pc
Spare - 1pc

HARDWARE FOR METAL BED FRAME

C JCB M6 X 25mm (1") - 4 pcs
Spare - 1 pc

D Flat washer - 4 pcs
Spare - 1 pc

E Split washer - 4 pcs
Spare - 1 pc

NOTE: WE INCLUDE SPARE HARDWARE IN CASE DAMAGE OCCURS DURING ASSEMBLY.

Step 1

Attach the legs (2) and (3) to headboard panel (1) and pillow stop (4) using JCB (A) and barrel nut (B). Tighten with the Allen wrench (F).

Adult assembly

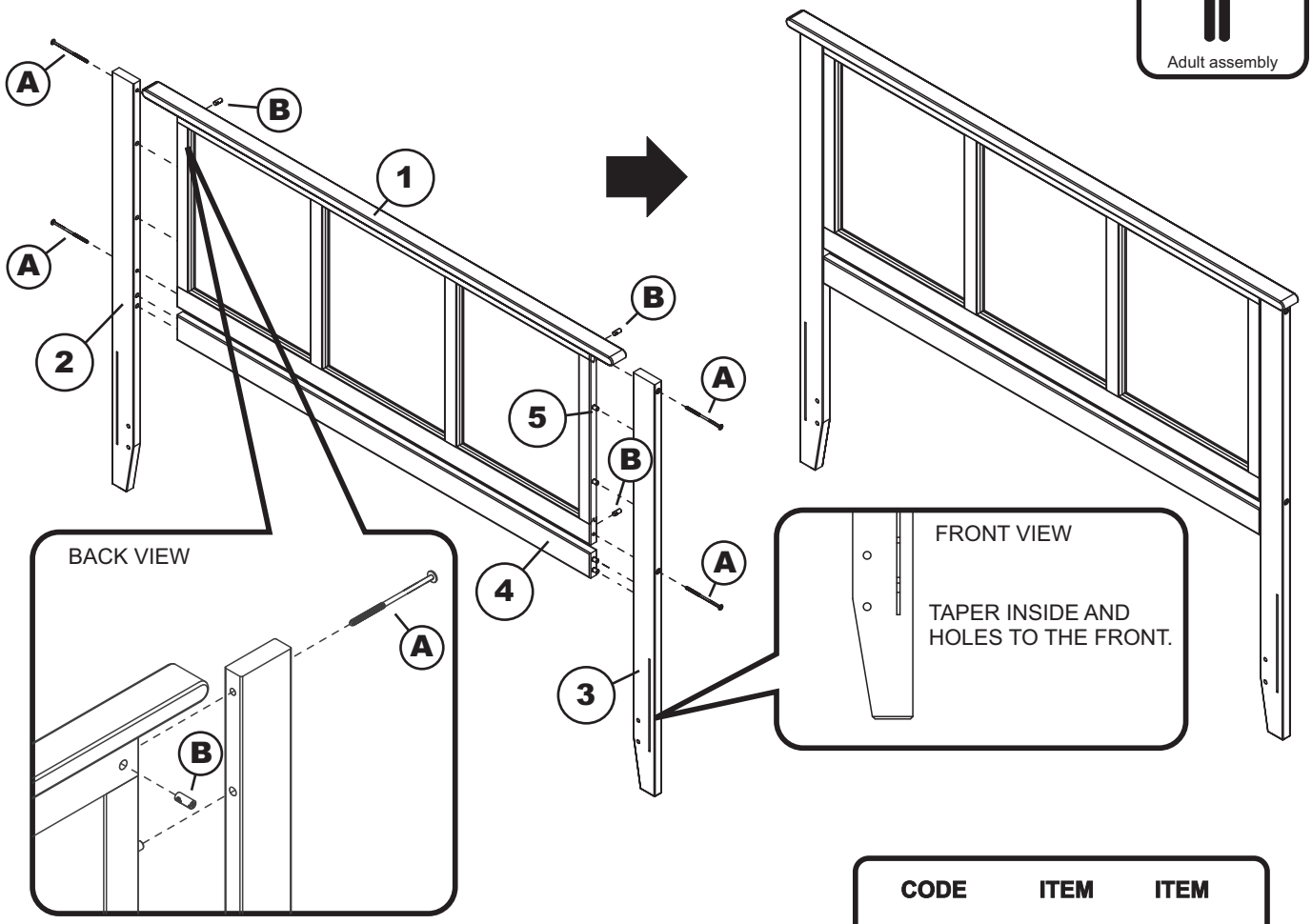

CODE	ITEM	ITEM
HB-MDN	R-28684X	R-28685X

PO :

If you purchased a wood headboard to attach to metal bed frame, please refer to page 2.

ASSEMBLY INSTRUCTIONS

Before assembling your bed, please read through these instructions carefully and familiarize yourself with the different parts.

Instructions apply for bed sizes
Queen > King

Metal bed frames are sold separately from wood headboards. The hardware shown on this page is supplied with your wood headboard for attaching the bed frame to the headboard.
The metal bed frame is supplied with its own assembly instructions and hardware.

Step 1 Attach the headboard assembly to the metal frame using JCB (C), flat washer (D), and split washer (E) then tighten with Allen wrench (F), as shown below.

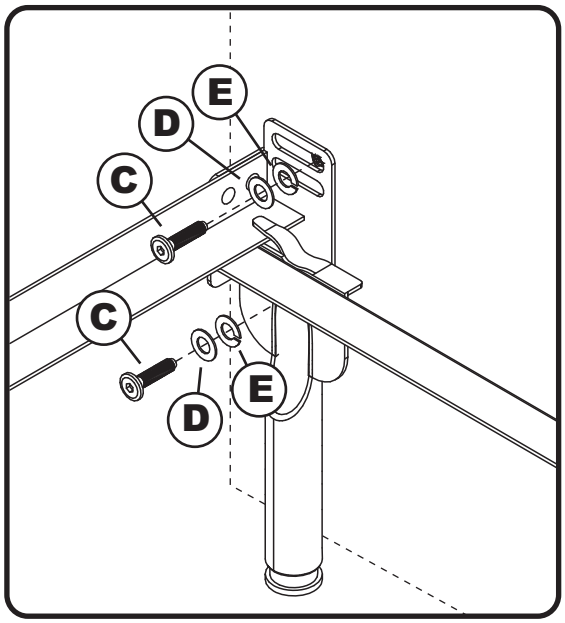

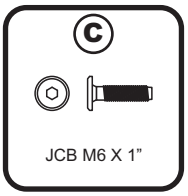

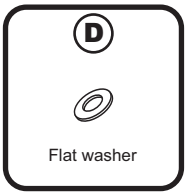

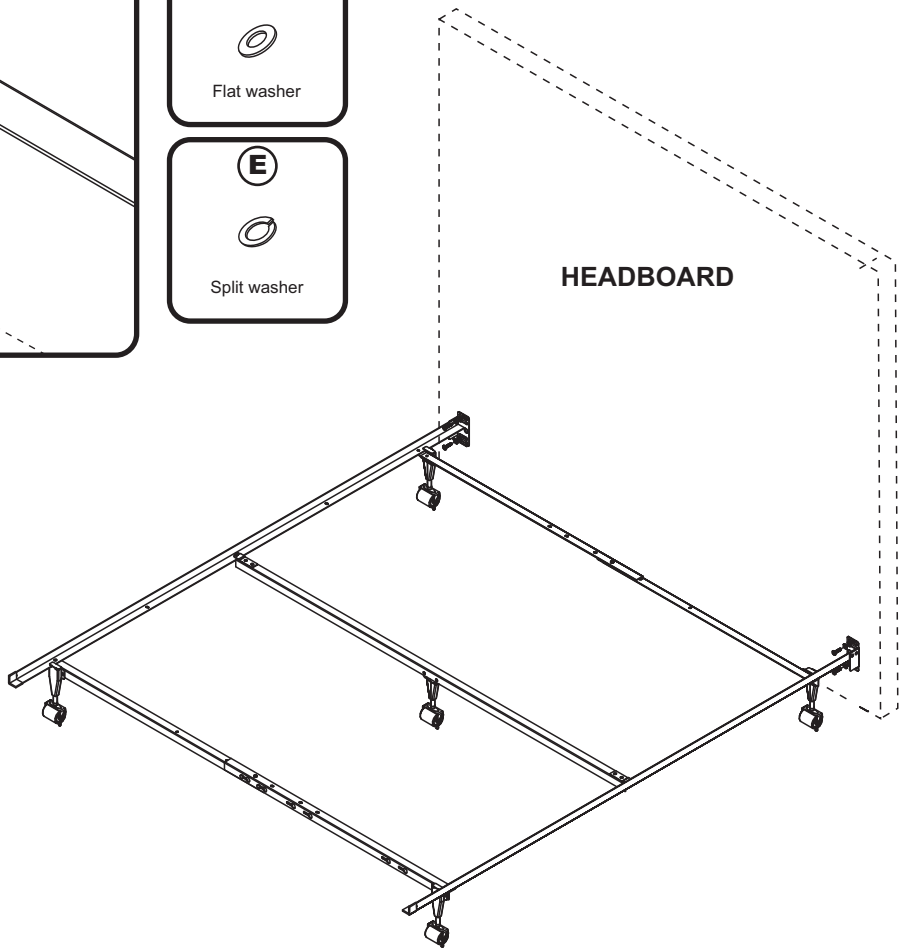

Congratulations!

Your bed is now ready for use.
To ensure lasting safety, we recommend that you periodically check that all screws are tight and all parts are secure.