BED FRAME

afifurnishings.com

FULL
ASSEMBLY INSTRUCTIONS

Before assembling your bed frame, please read through these instructions carefully and familiarize yourself with the different parts.
ATTENTION!If you receive a damaged or defective item, please contact afifurnishings at customerservice@afifurnishings.com or 1-800-955-3726

PARTS LIST

1	FOOT RAIL	1 PC
2	LEFT LEG	1 PC
3	RIGHT LEG	1 PC
4	SIDE RAILS	2 PCS
5	SLAT KIT	2 SET
6	SUPPORT RAIL	2 PCS
8	SUPPORT LEGS	3 PCS

HARDWARE

- A JCB M6 X 100mm (4") - 2pcs
- B Barrel Nut - 2pcs
- C Wood dowel 10 X 40mm(1 5/8") - 4 pcs Spare - 1 pc
- D Wood button - 2 pcs Spare - 1 pc
- E JCB M6 X 30mm (1 1/8") - 6 pcs Spare - 1 pc
- F Cap Nut - 6 pcs
- G JCB M8 X 40mm (1 5/8") - 3 pcs Spare - 1 pc
- H Wood screw(1 1/4") - 13 pcs Spare - 1 pc
- I Allen wrench M4 - 1pc Spare - 1pc
- J Allen wrench M5 - 1pc
- K Split & Flat Washer 3pcs 3pcs Spare - 1pc

NOTE: WE INCLUDE SPARE HARDWARE IN CASE DAMAGE OCCURS DURINGASSEMBLY.

Step 1

Attach the legs (2) and (3) to foot rail (1), using wood dowel (A) JCB M6 X 100mm (A) and barrel nut (B).
Tighten with Allen wrench M4 (J).
Cover holes with wood button (D) as shown.

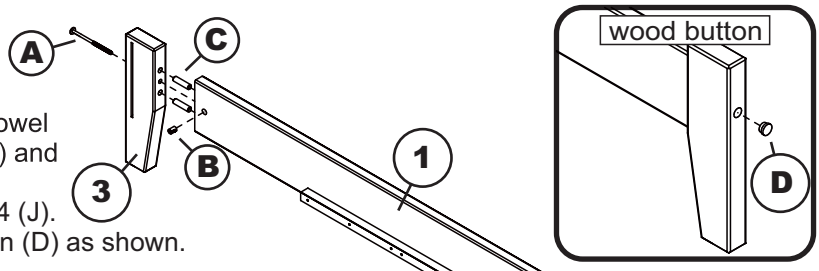

Step 2

Attach the side rails (04) to the headboard and footboard (1) using the bed hook as shown below.

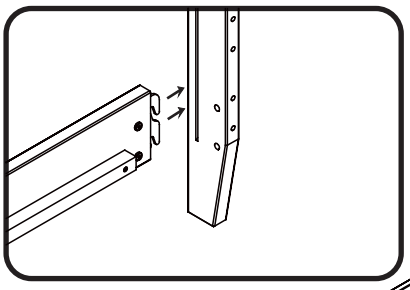

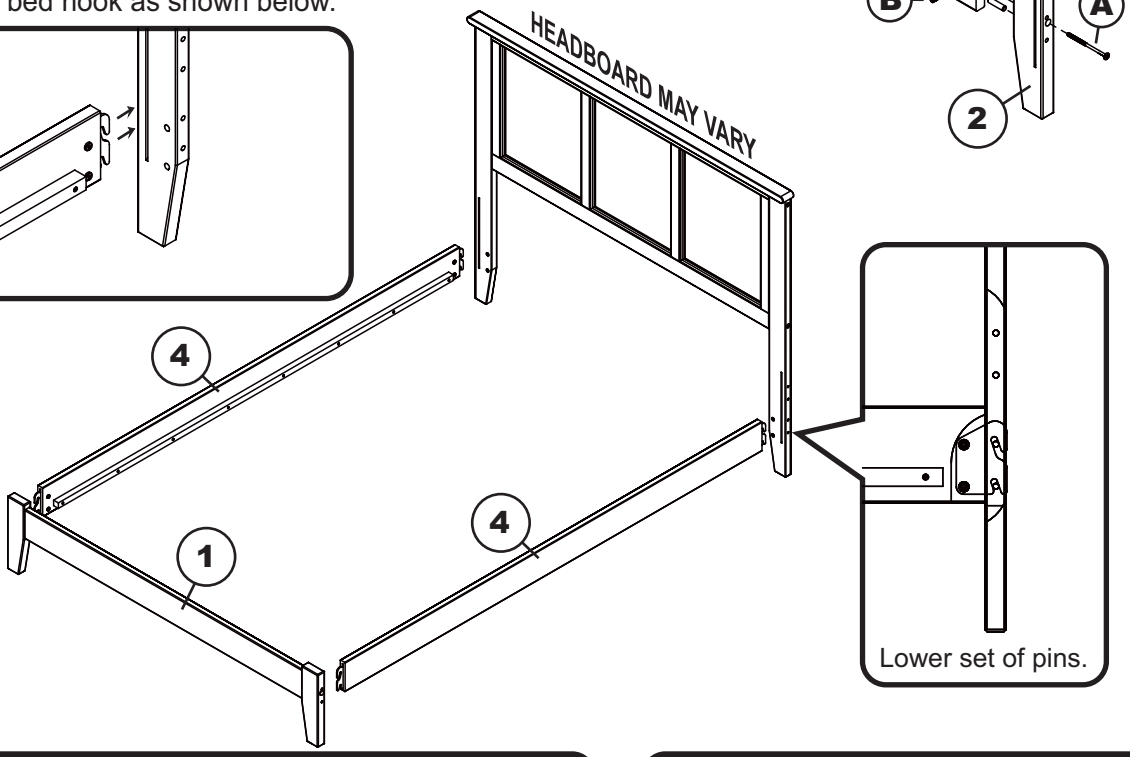

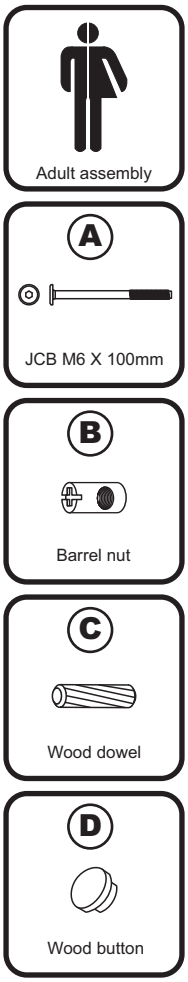

PO:

CODE	ITEM
FR-UBN2-LOO	R-26623X

QUEEN

Step 3 Attach support leg (8) to support rail (6)(7) as shown below. Using JCB M8 (G) split and flat washer (I) tighten with Allen wrench M5 (K).

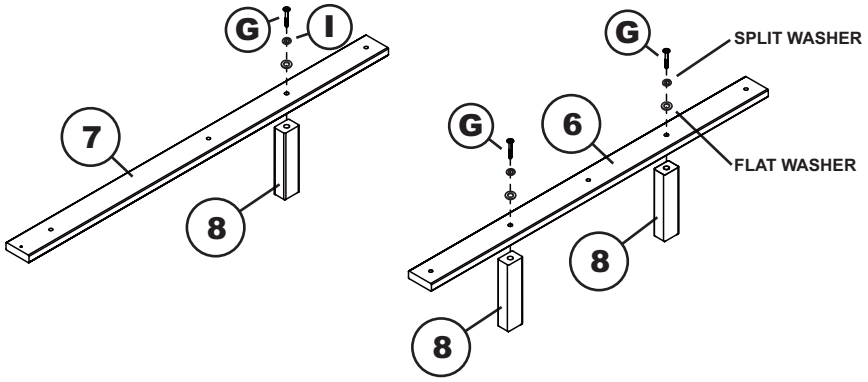

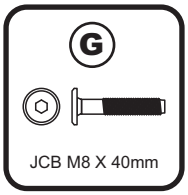

Step 4 Attach HB support rail (6) and FB support rail (7) to the slat kit (5) as shown below using JCB M6 X 30mm (E) and cap nut (F).Tighten with Allen wrench M4 (J). Using wood screw (H) tighten with Phillips head screwdriver. (Customer supplied)

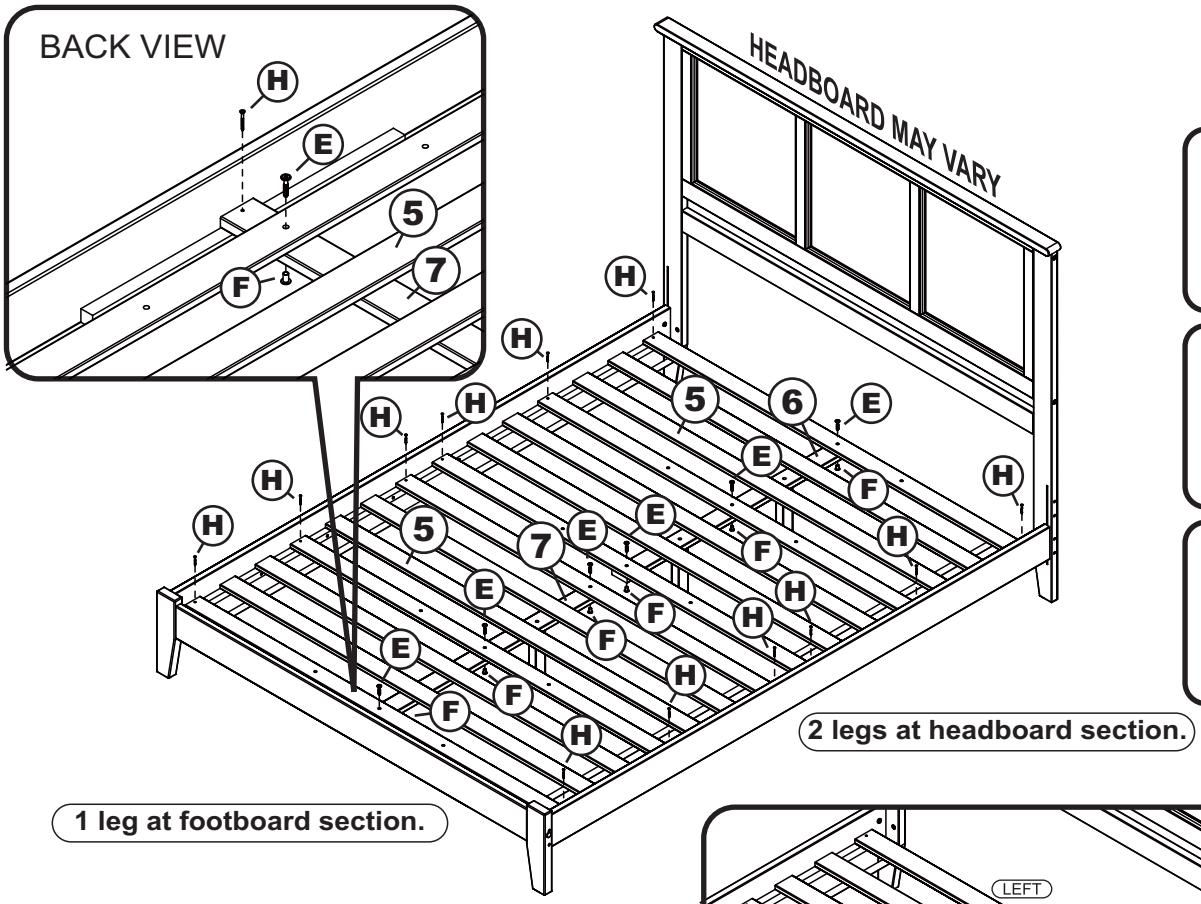

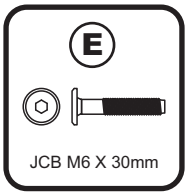

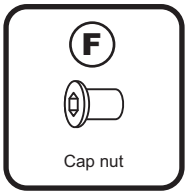

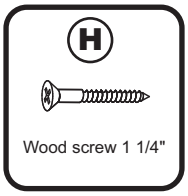

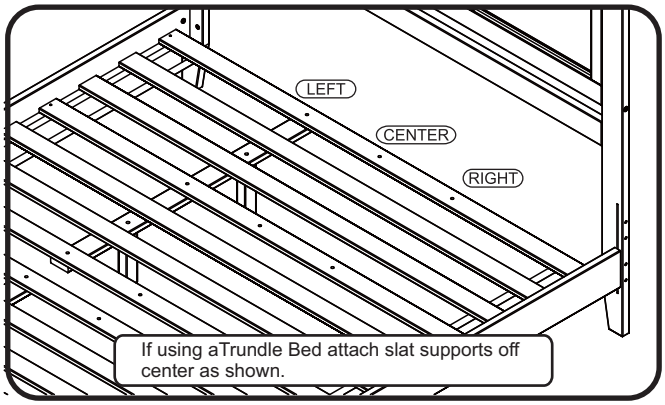

Congratulations!

Your bed is now ready for use.

We recommend that you periodically recheck that all screws are tight to ensure lasting safety.

HEADBOARD

afifurnishings.com

ASSEMBLY INSTRUCTIONS

Before assembling your headboard, please read through these instructions carefully and familiarize yourself with the different parts.
ATTENTION! If you receive a damaged or defective item, please contact afifurnishings at customerservice@afifurnishings.com or 1-800-955-3726

READY TO ASSEMBLE

PARTS LIST

1	HEADBOARD PANEL	1 PC
2	LEFT LEG	1 PC
3	RIGHT LEG	1 PC

Instructions apply for bed sizes
TWIN > FULL > QUEEN > KING

HARDWARE

(A) Wooden dowel - 4 pcs
Spare - 1 pc

(B) JCB M6 X 35mm (1 3/8") - 4 pcs
Spare - 1 pc

(F) Allen wrench - 1pc
Spare - 1pc

HARDWARE FOR METAL BED FRAME

(C) JCB M6 X 25mm (1") - 4 pcs
Spare - 1 pc

(D) Flat washer - 4 pcs
Spare - 1 pc

(E) Split washer - 4 pcs
Spare - 1 pc

NOTE: WE INCLUDE SPARE HARDWARE IN CASE DAMAGE OCCURS DURING ASSEMBLY.

Step 1

Attach the legs (2) and (3) to headboard panel (1), using wooden dowels (A) and JCB (B). Tighten with the Allen wrench (F).

Adult assembly

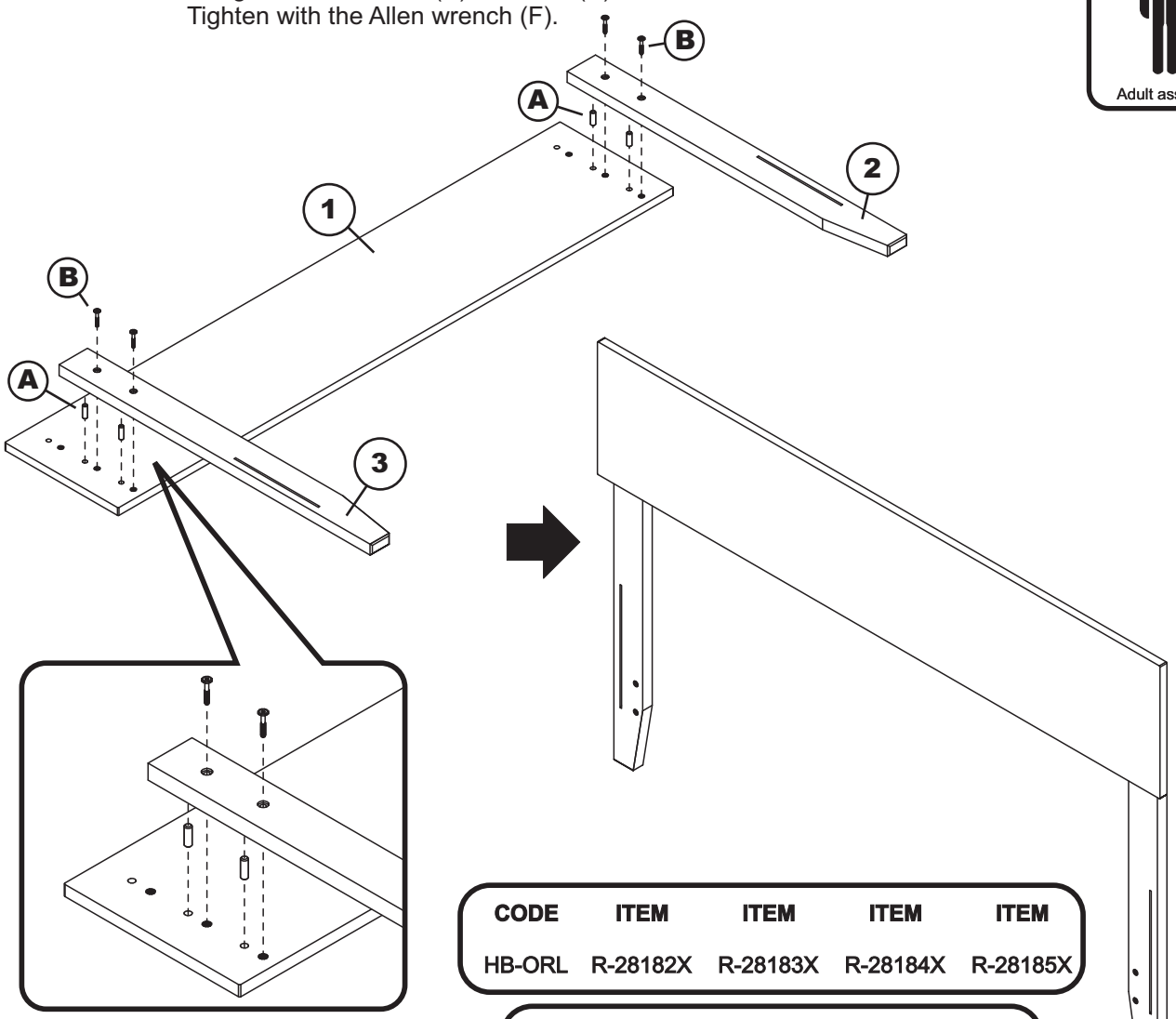

CODE	ITEM	ITEM	ITEM	ITEM
HB-ORL	R-28182X	R-28183X	R-28184X	R-28185X

PO:

If you purchased a wood headboard to attach to metal bed frame, please refer to page 2.

afifurnishings.com

ASSEMBLY INSTRUCTIONS

Before assembling your bed, please read through these instructions carefully and familiarize yourself with the different parts.

Instructions apply for bed sizes
TWIN > FULL > QUEEN > KING

Metal bed frames are sold separately from wood headboards. The hardware shown on this page is supplied with your wood headboard for attaching the bed frame to the headboard.
The metal bed frame is supplied with its own assembly instructions and hardware.

Step 1 Attach the headboard assembly to the metal frame using JCB (C), flat washer (D), and split washer (E) then tighten with Allen wrench (F), as shown below.

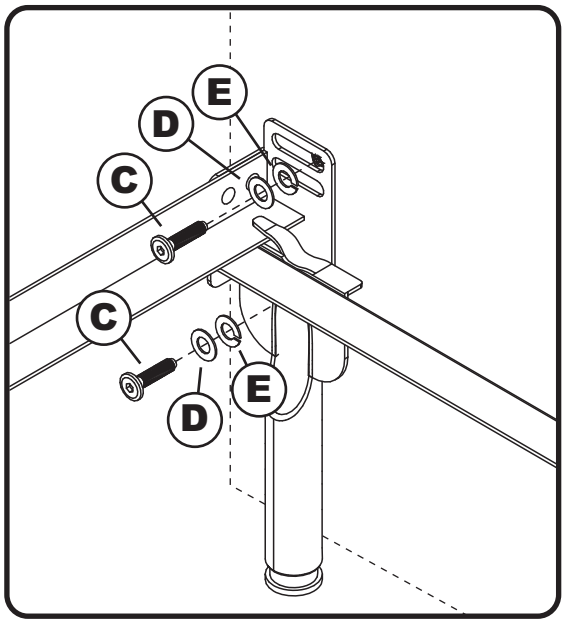

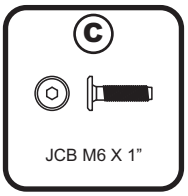

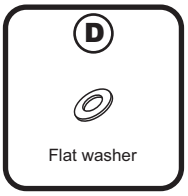

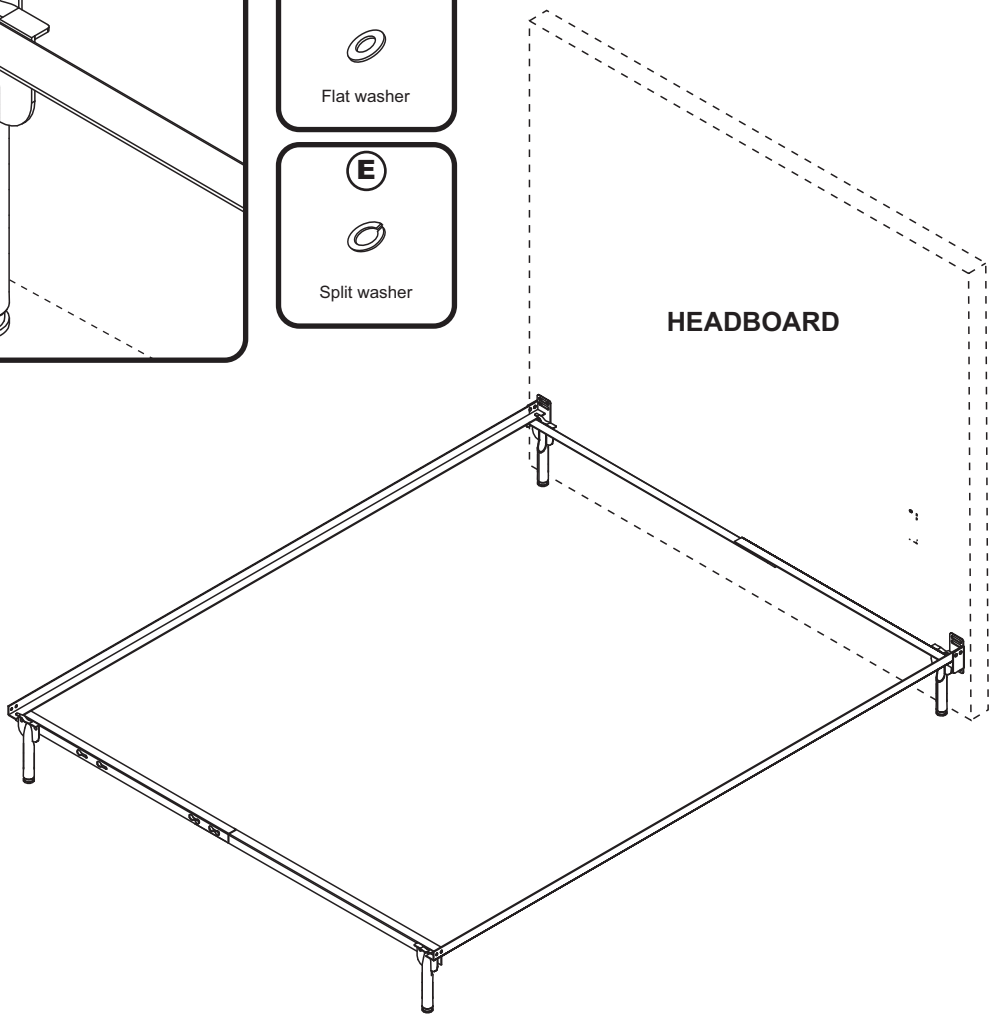

Congratulations!

Your bed is now ready for use.
To ensure lasting safety, we recommend that you periodically check that all screws are tight and all parts are secure.