BED FRAME

afifurnishings.com

TWIN

ASSEMBLY INSTRUCTIONS

Before assembling your bed frame, please read through these instructions carefully and familiarize yourself with the different parts.

ATTENTION! If you receive a damaged or defective item, please contact afifurnishings at customerservice@afifurnishings.com or 1-800-955-3726

PARTS LIST

1	FOOT RAIL	1 PC
2	LEFT LEG	1 PC
3	RIGHT LEG	1 PC
4	SIDE RAILS	2 PCS
5	SLAT KIT	2 SET

HARDWARE

- A JCB M6 X 100mm (4") - 2 pcs
  Spare - 1 pc
- B Barrel nut - 2 pcs
- C Wood dowel 10 X 40mm(1 5/8") - 4 pcs
  Spare - 1 pc
- D Wood button - 2 pcs
  Spare - 1 pc
- E Wood screw(1 1/4") - 12 pcs
  Spare - 1 pc
- F Allen wrench M4 - 1pc
  Spare - 1pc

NOTE: WE INCLUDE SPARE HARDWARE IN CASE DAMAGE OCCURS DURING ASSEMBLY.

Step 1

Attach the legs (2) and (3) to foot rail (1), using wood dowel (C) JCB M6 X 100mm (A) and barrel nut (B).
Tighten with the Allen wrench (F).
Cover holes with wood button (D) as shown.

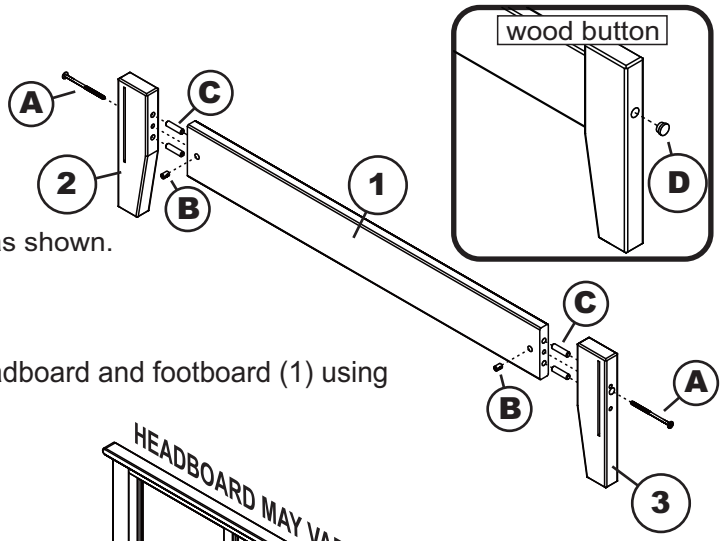

Step 2

Attach the side rails (04) to the headboard and footboard (1) using the bed hook as shown below.

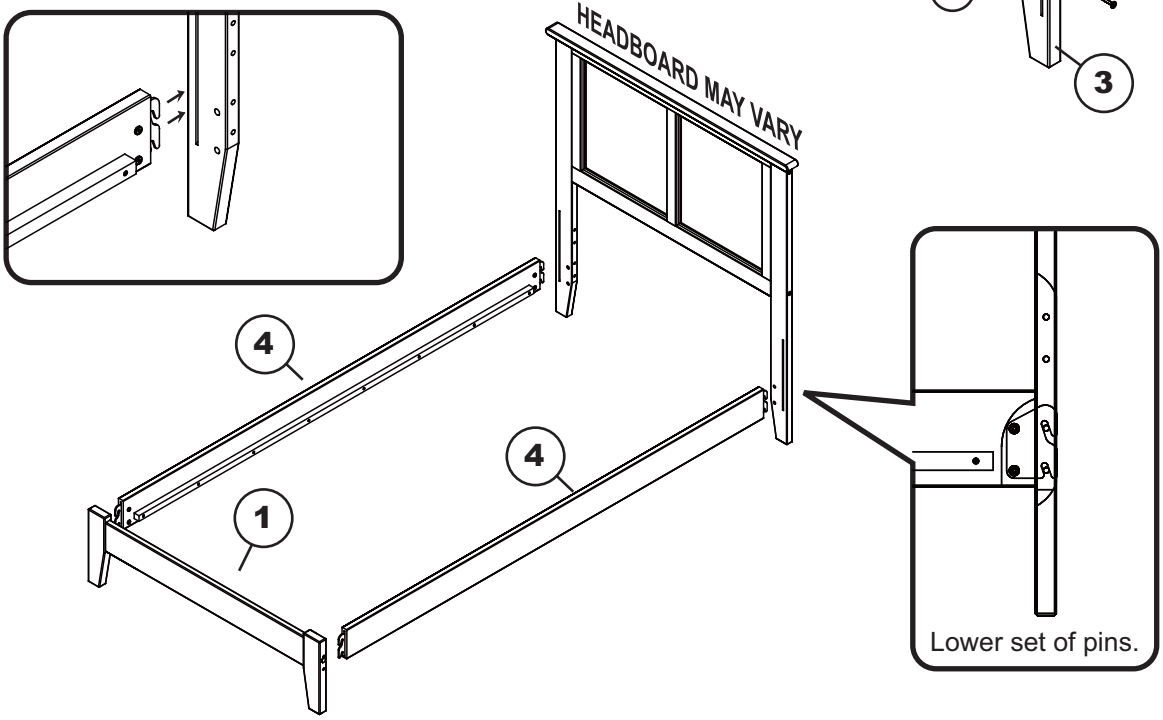

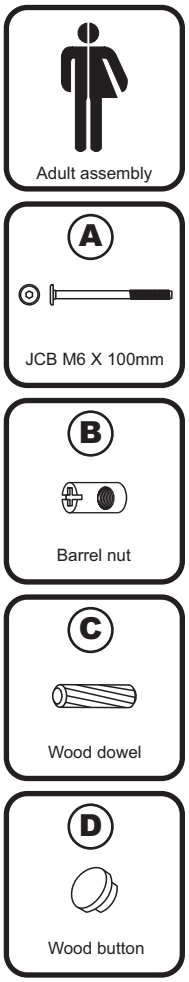

PO:

CODE	ITEM
FR-UBN2-LOO	R-26622X

TWIN

Step 3 Attach slat kit (5) to the bed as shown below. Using wood screw (E) tighten with Phillips head screwdriver. (Customer supplied)

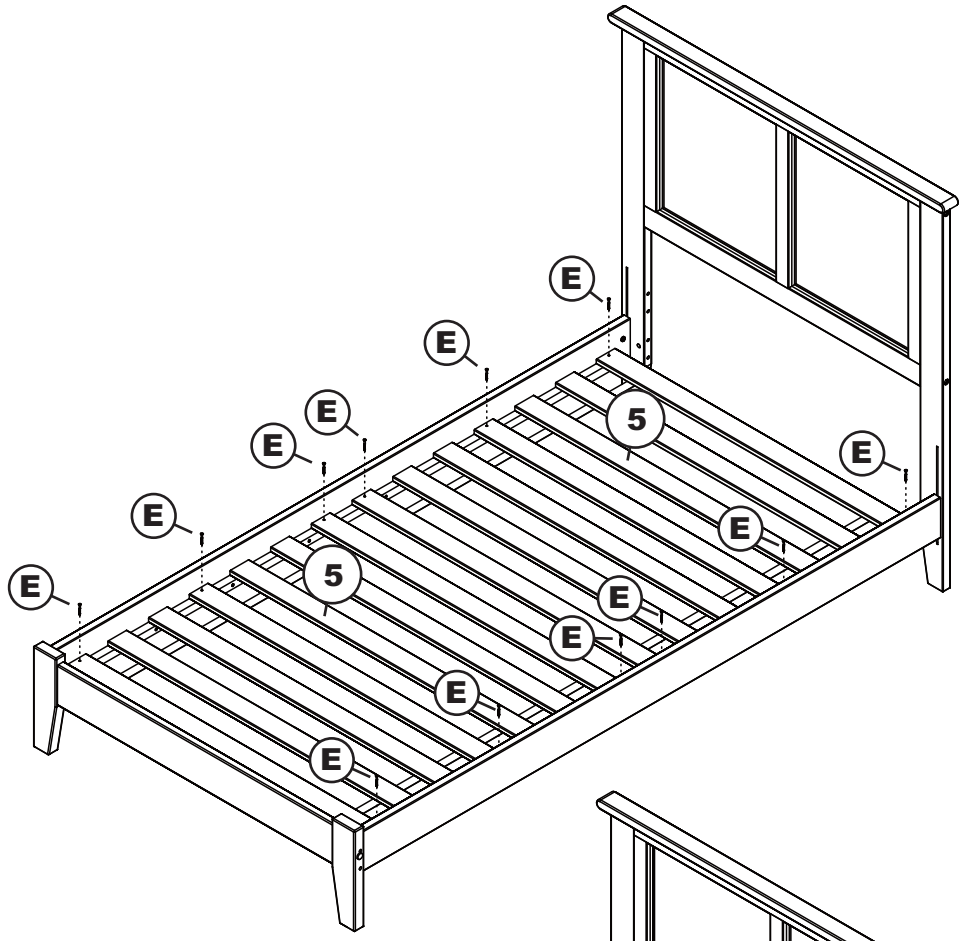

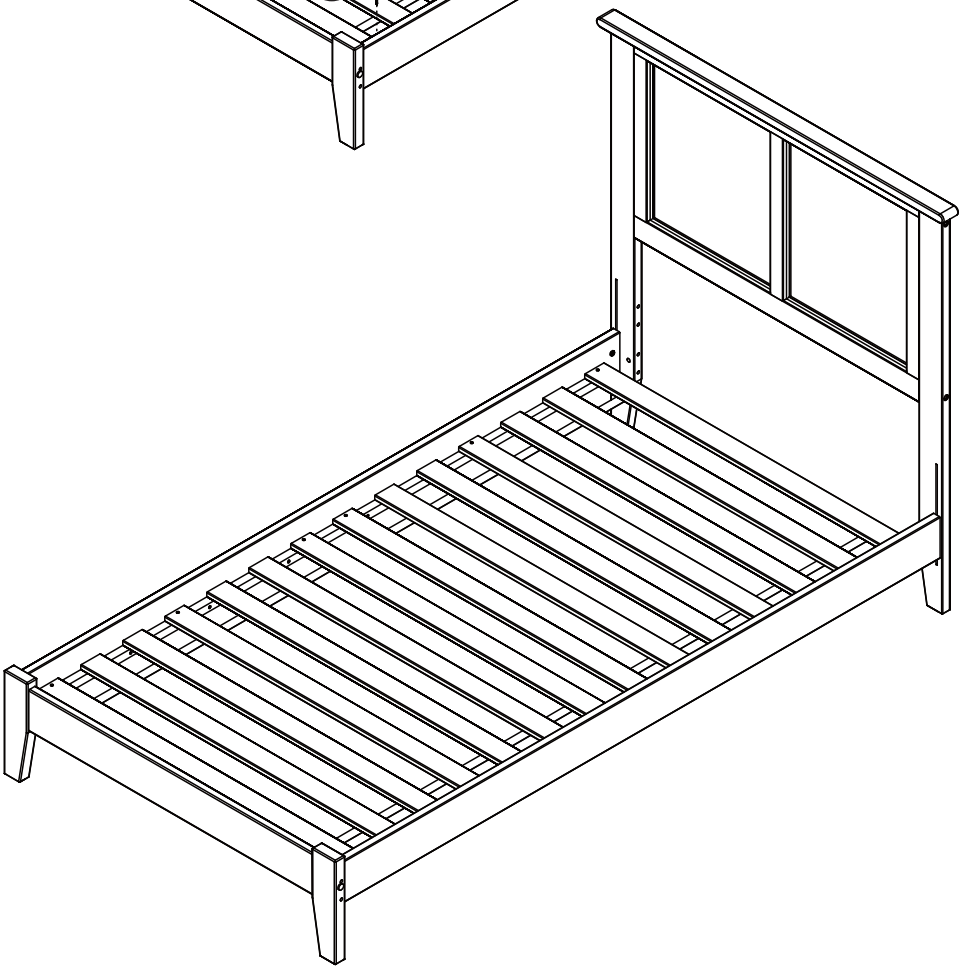

Congratulations!

Your bed is now ready for use.

We recommend that you periodically recheck that all screws are tight to ensure lasting safety.

HEADBOARD

afifurnishings.com

ASSEMBLY INSTRUCTIONS

Before assembling your headboard, please read through these instructions carefully and familiarize yourself with the different parts.
ATTENTION! If you receive a damaged or defective item, please contact afifurnishings at customerservice@afifurnishings.com or 1-800-955-3726

READY TO ASSEMBLE

PARTS LIST

1	HEADBOARD PANEL	1 PC
2	LEFT LEG	1 PC
3	RIGHT LEG	1 PC
4	WOOD DOWELS (Factory Installed)	4 PCS

Instructions apply for bed sizes
TWIN > FULL

HARDWARE

- **A** JCB M6 X 110mm (4 3/8") - 4 pcs
  Spare - 1 pc
- **B** Barrel nut - 4 pcs
  Spare - 1 pc
- **F** Allen wrench - 1pc
  Spare - 1pc

HARDWARE FOR METAL BED FRAME

- **C** JCB M6 X 25mm (1") - 4 pcs
  Spare - 1 pc
- **D** Flat washer - 4 pcs
  Spare - 1 pc
- **E** Split washer - 4 pcs
  Spare - 1 pc

NOTE: WE INCLUDE SPARE HARDWARE IN CASE DAMAGE OCCURS DURING ASSEMBLY.

Step 1

Attach the legs (2) and (3) to headboard panel (1), using JCB (A) and barrel nut (B).
Tighten with the Allen wrench (F).

Adult assembly

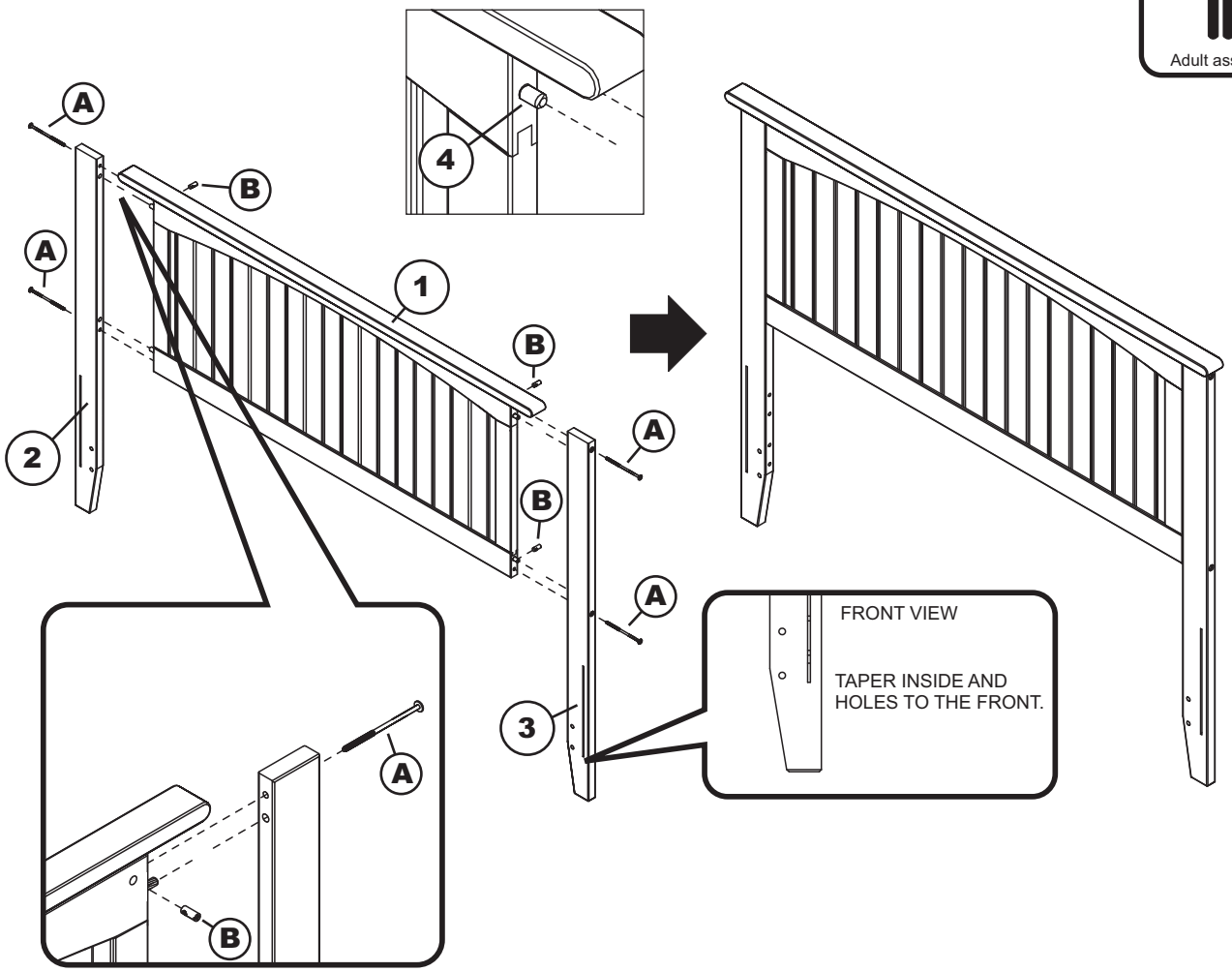

CODE	ITEM	ITEM
HB-NKT	R-28282X	R-28283X

PO :

If you purchased a wood headboard to attach to metal bed frame, please refer to page 2.

afifurnishings.com

ASSEMBLY INSTRUCTIONS

Before assembling your bed, please read through these instructions carefully and familiarize yourself with the different parts.

Instructions apply for bed sizes
Twin > Full

Metal bed frames are sold separately from wood headboards. The hardware shown on this page is supplied with your wood headboard for attaching the bed frame to the headboard.
The metal bed frame is supplied with its own assembly instructions and hardware.

Step 1 Attach the headboard assembly to the metal frame using JCB (C), flat washer (D), and split washer (E) then tighten with Allen wrench (F), as shown below.

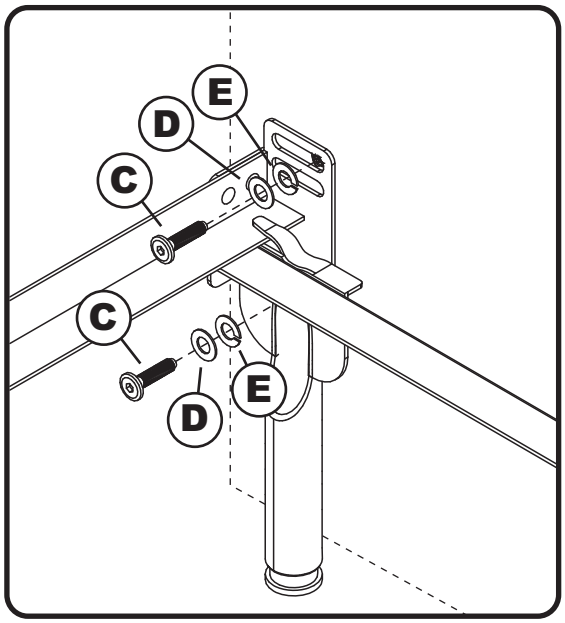

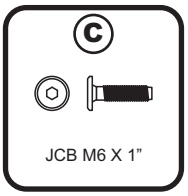

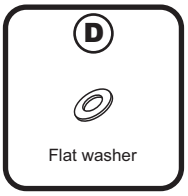

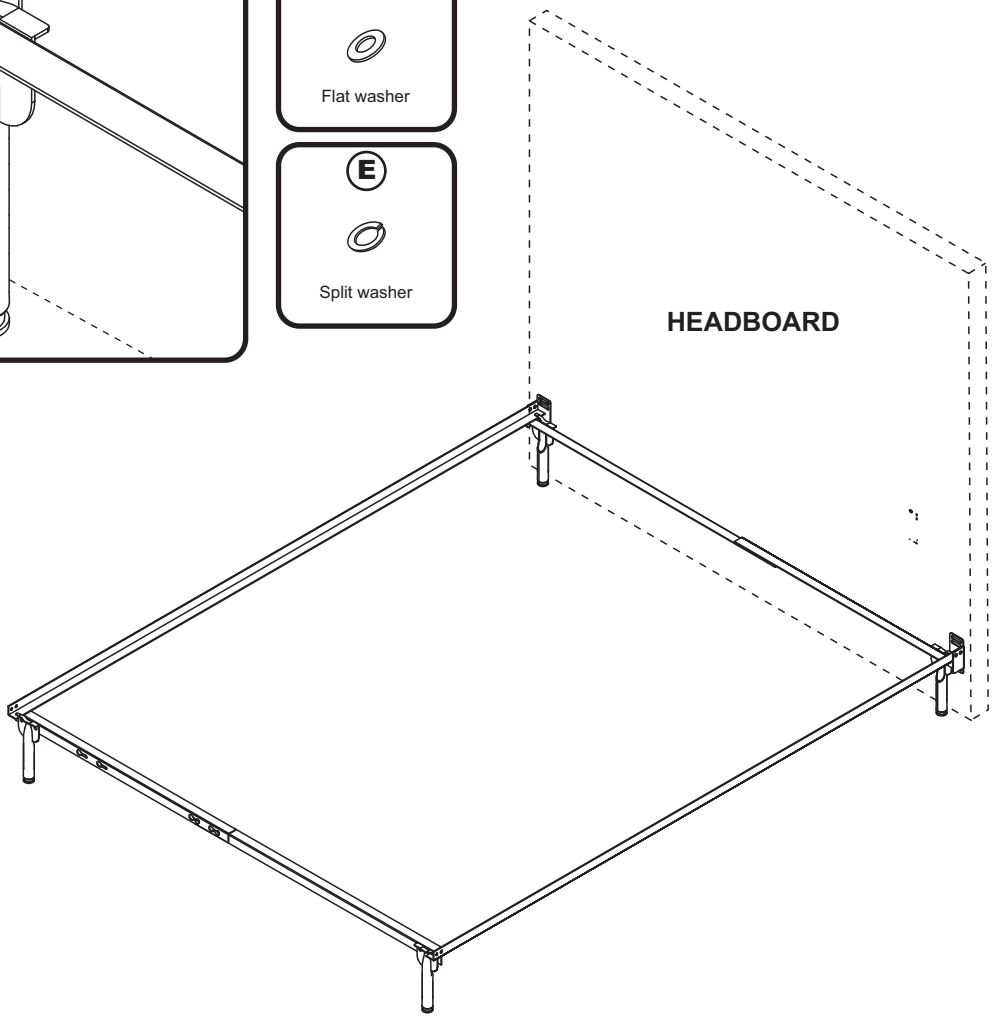

Congratulations!

Your bed is now ready for use.
To ensure lasting safety, we recommend that you periodically check that all screws are tight and all parts are secure.