ASSEMBLY INSTRUCTIONS
COASTER FINE FURNITURE

Fine Furniture for every stage of life

215911F(B1&B2)
Full Bed

ITEM: 215911F (B1&B2)

ASSEMBLY INSTRUCTIONS

COASTER FINE FURNITURE

ASSEMBLY TIPS:

1. Remove hardware from box and sort by size.
2. Please check to see that all hardware and parts are present prior to start of assembly.
3. Please follow attached instructions in the same sequence as numbered to assure fast & easy assembly.

WARNING!

1. Don't attempt to repair or modify parts that are broken or defective. Please contact the store immediately.
2. This product is for home use only and not intended for commercial establishments.

ASSEMBLY TIME	20 MINUTES

PARTS IDENTIFICATION

B1 (BOX 1)

A	HEADBOARD PANEL	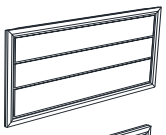	1PC
B	FOOTBOARD	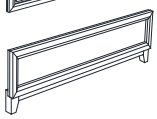	1PC
C	RIGHT HEADBOARD LEG		1PC
D	LEFT HEADBOARD LEG		1PC
E	BED SLAT		4PCS
F	BED SLAT SUPPORT WITH LEVELER		4PCS

B2 (BOX 2)

G	BED RAIL		2PCS
HB	215911F(B1) FROM BOX 1 HEADBOARD COMPLETE		1PC
B	215911F(B1) FROM BOX 1 FOOTBOARD		1PC

HARDWARE IDENTIFICATION

Z-B1 (BOX 1) - HARDWARE PACK IS LOCATED IN 215911F (B1)

1	BOLT (M6 x 30mm - BLK)		6PCS
2	LOCK WASHER (1/4" - BLK)		6PCS
3	FLAT WASHER (1/4"ID x 13mm - BLK)		6PCS
4	SMALL ALLEN WRENCH (M4 x 60mm - BLK)		1PC
5	BIG ALLEN WRENCH (M5 x 65mm - BLK)		1PC
6	FLAT HEAD SCREW (M4 x 32mm - RBW)		8PCS

NOTE:

Phillips head screw driver is required in the assembly process; however, manufacturer does not provide this item.

ITEM: **215911F (B1&B2)**

COASTER FINE FURNITURE

ASSEMBLY INSTRUCTIONS

STEP 1

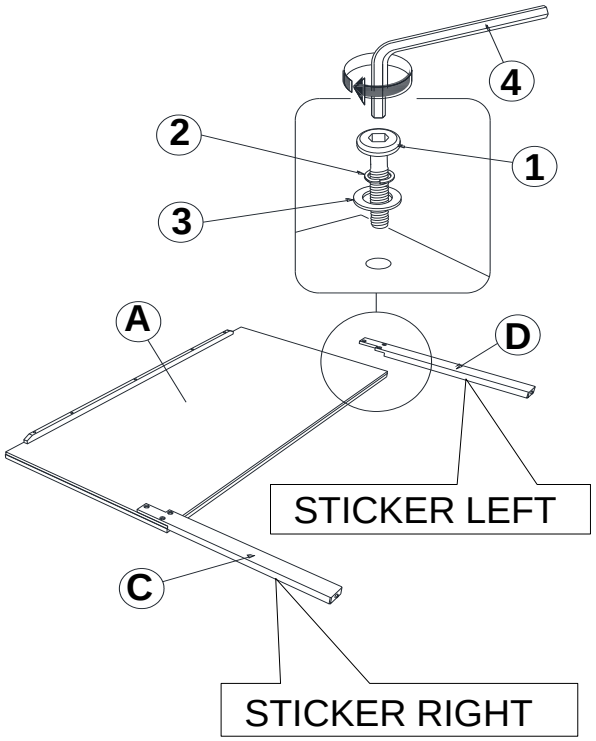

BACK VIEW

Note : Please take note of the marking sticker (L & R) on the headboard legs.

STEP 2

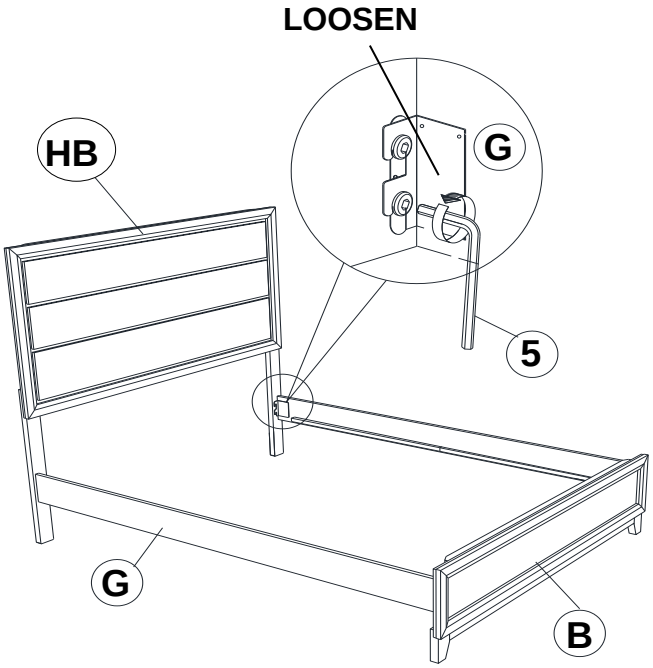

STEP 3

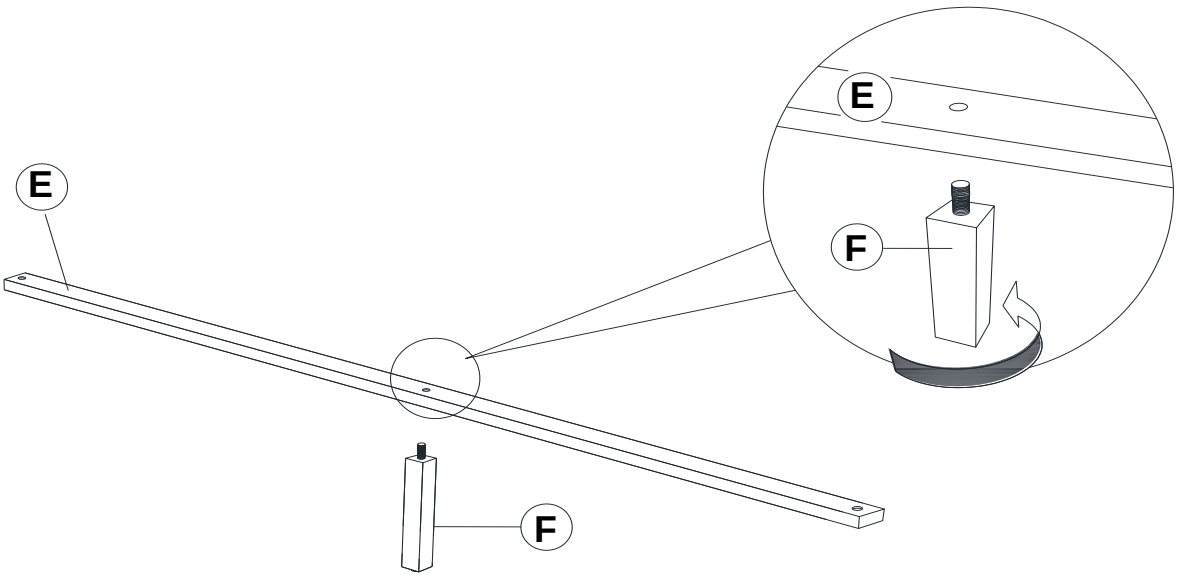

ITEM: 215911F (B1&B2)

COASTER FINE FURNITURE

ASSEMBLY INSTRUCTIONS

STEP 4

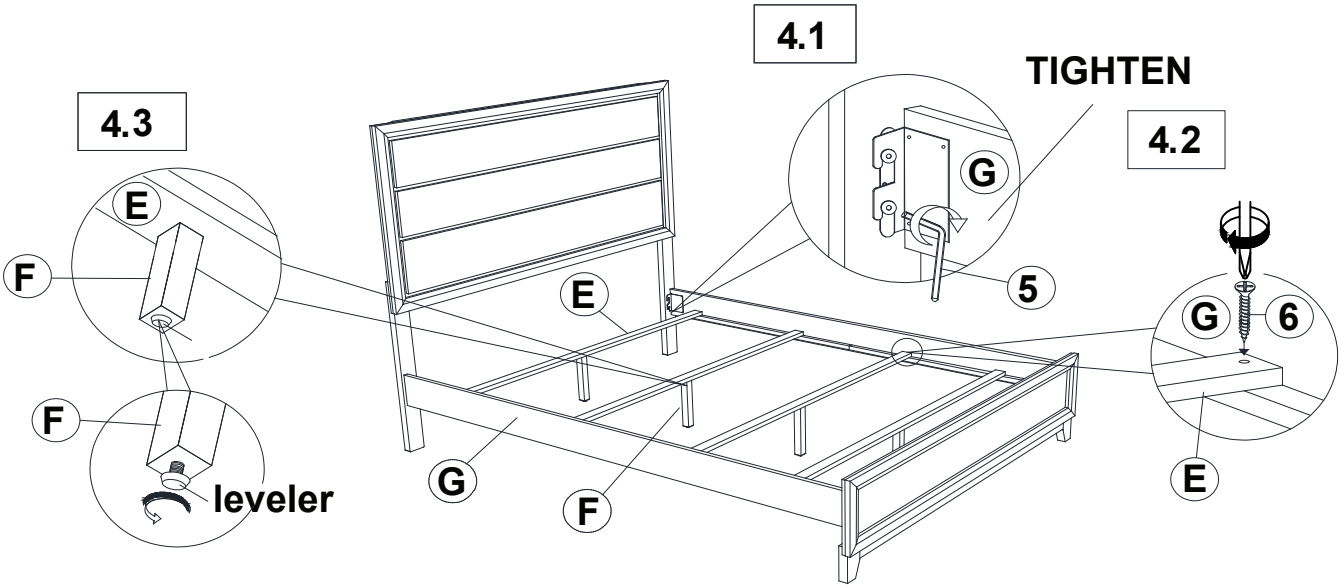

NOTE:

1. Push the side rail inward until the slats are flush and resting on the side rail support then fasten each slat to the side rail support using the provided screw.
2. The side rail warpage is a temporary condition, it will straighten out once the bed is fully assembled.

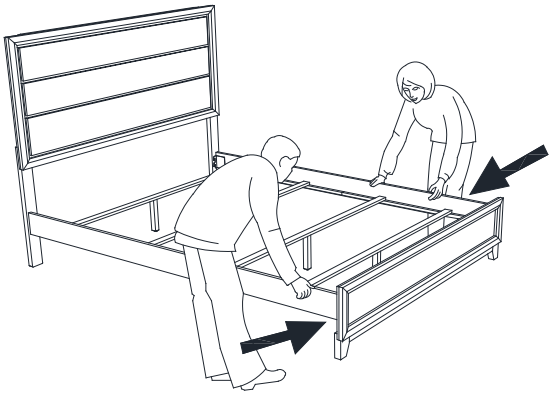

STEP 5

COMPLETE

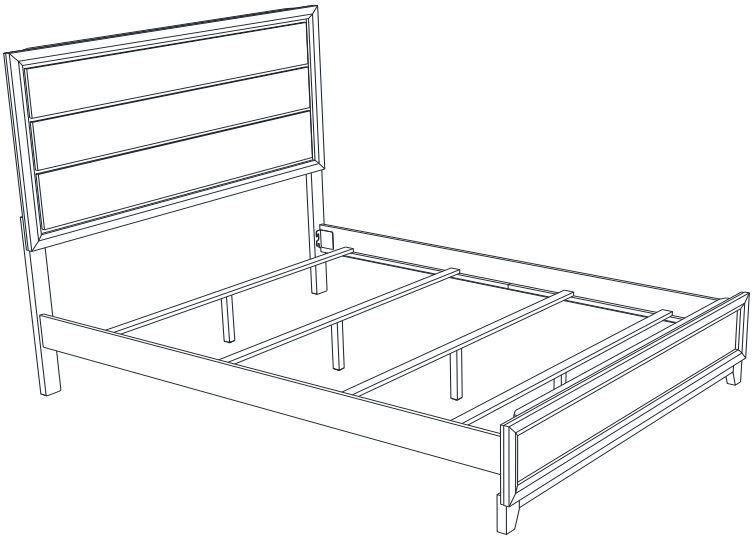

ITEM: 215911F (B1&B2)

Inner Size : 54.75"W X 76.00"D

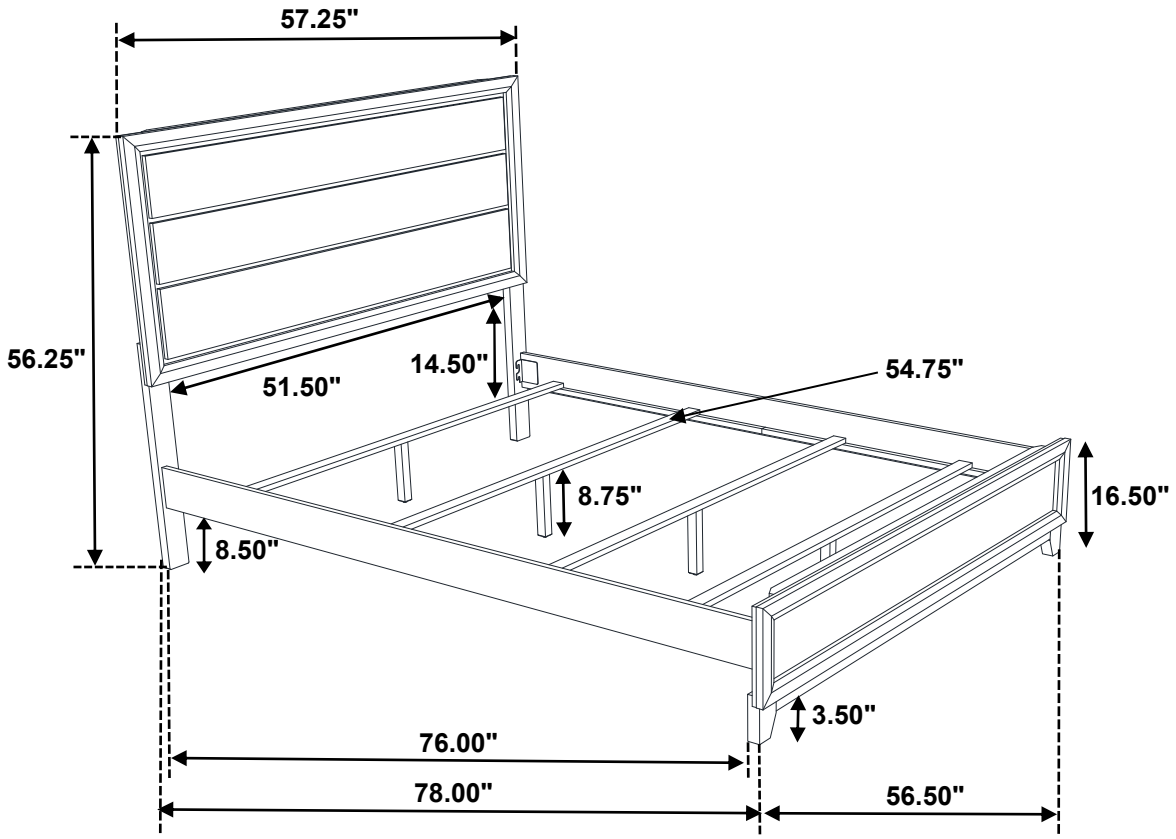

Note : Dimension tolerance ± 5%