COASTER®
FINE FURNITURE

ASSEMBLY INSTRUCTIONS
COASTER FINE FURNITURE

Fine Furniture for every stage of life

706568
COFFEE TABLE

REVISION 0 : 12/12/2025

COASTERFURNITURE.COM

ITEM:706568

ASSEMBLY INSTRUCTIONS

COASTER FINE FURNITURE

ASSEMBLY TIPS:

1. Remove hardware from box and sort by size.
2. Please check to see that all hardware and parts are present prior to start of assembly.
3. Please follow attached instructions in the same sequence as numbered to assure fast & easy assembly.

WARNING!

1. Don't attempt to repair or modify parts that are broken or defective. Please contact the store immediately.
2. This product is for home use only and not intended for commercial establishments.

ASSEMBLY TIME	25 MINUTES

PARTS IDENTIFICATION

A	TOP	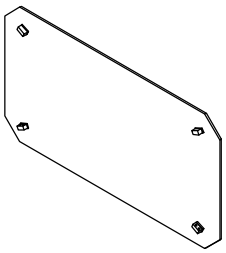	1PC
B	LEG B		2PCS
C	LEG C		2PCS
D	LEG SUPPORT FRAME	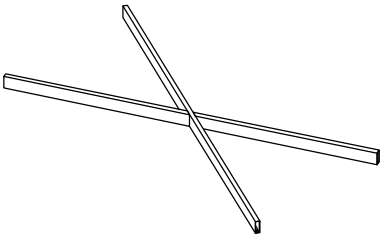	1PC

ITEM:706568

ASSEMBLY INSTRUCTIONS

COASTER FINE FURNITURE

Z

HARDWARE IDENTIFICATION

1	BOLT (1/4" x 12mm SR)		16PCS	3	COVER		8PCS
2	CAP (20 x 40mm BLK)		4PCS	4	ALLEN WRENCH (4mm)		1PC

STEP 1

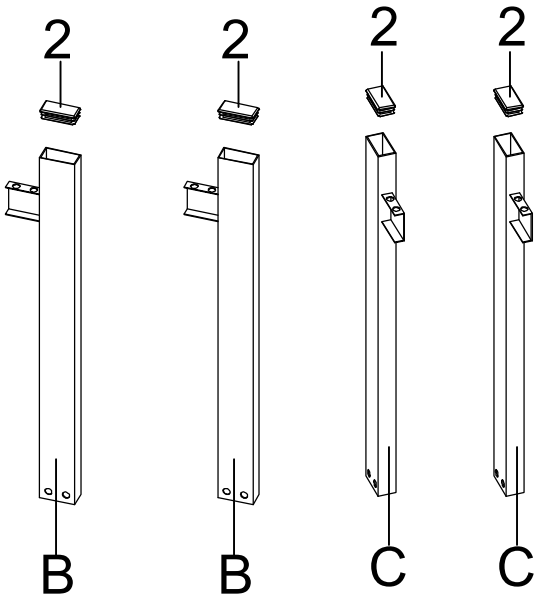

STEP 2

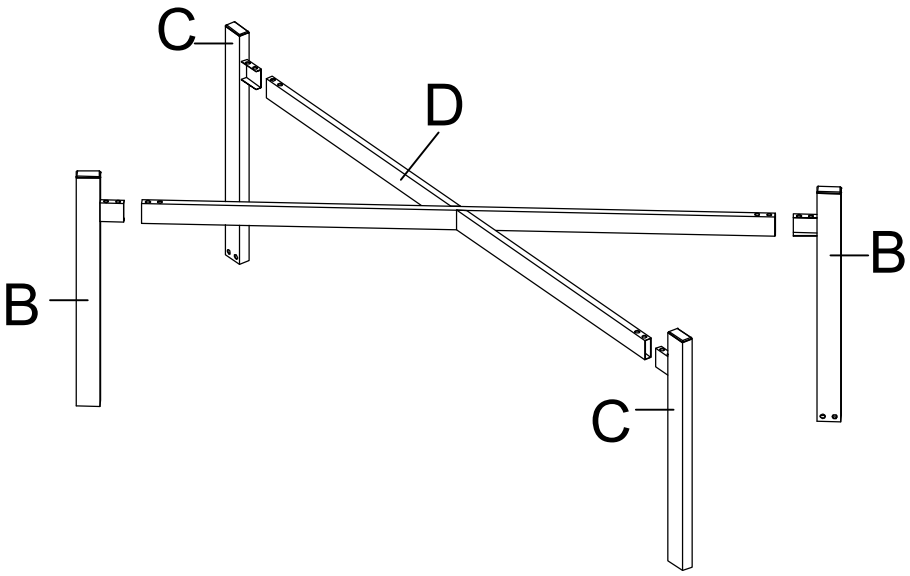

ITEM:706568

ASSEMBLY INSTRUCTIONS

COASTER FINE FURNITURE

STEP 3

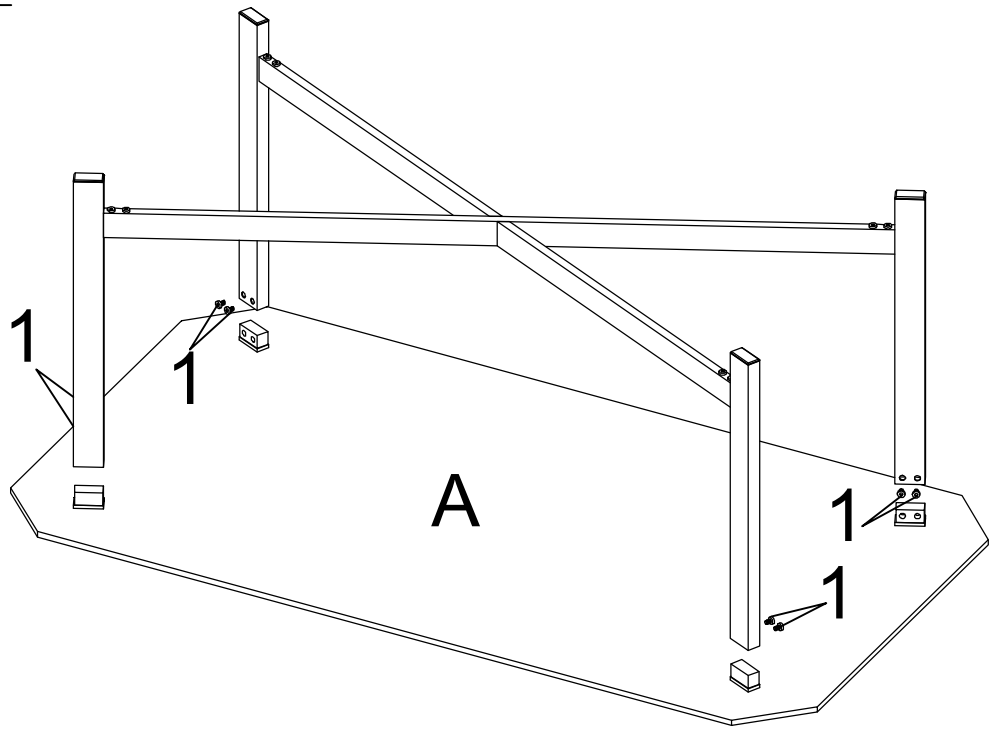

STEP 4

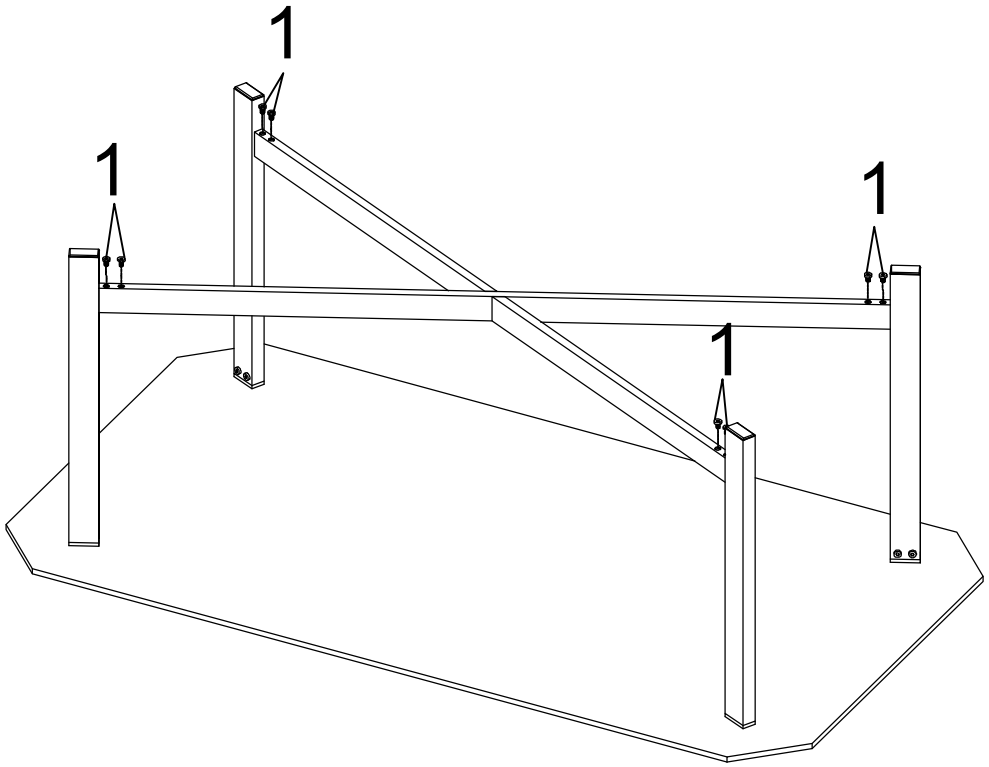

ITEM:706568

ASSEMBLY INSTRUCTIONS

STEP 5

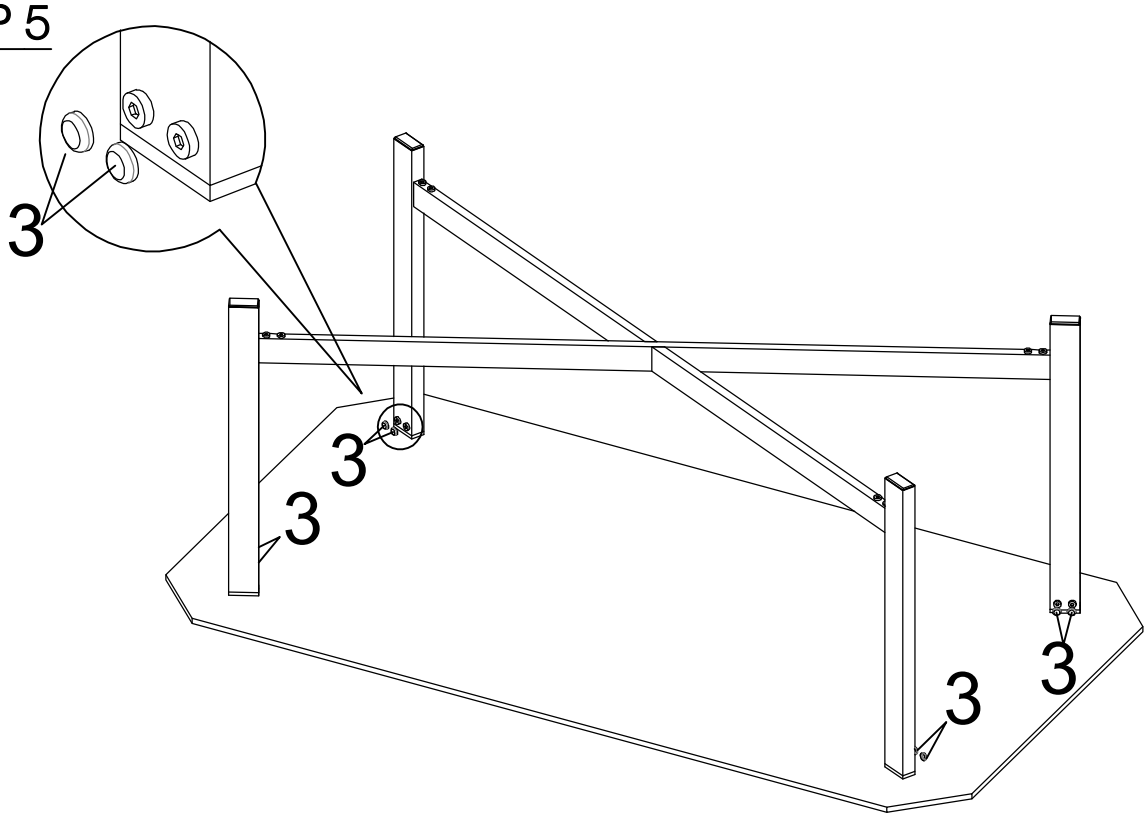

STEP 6

COMPLETE

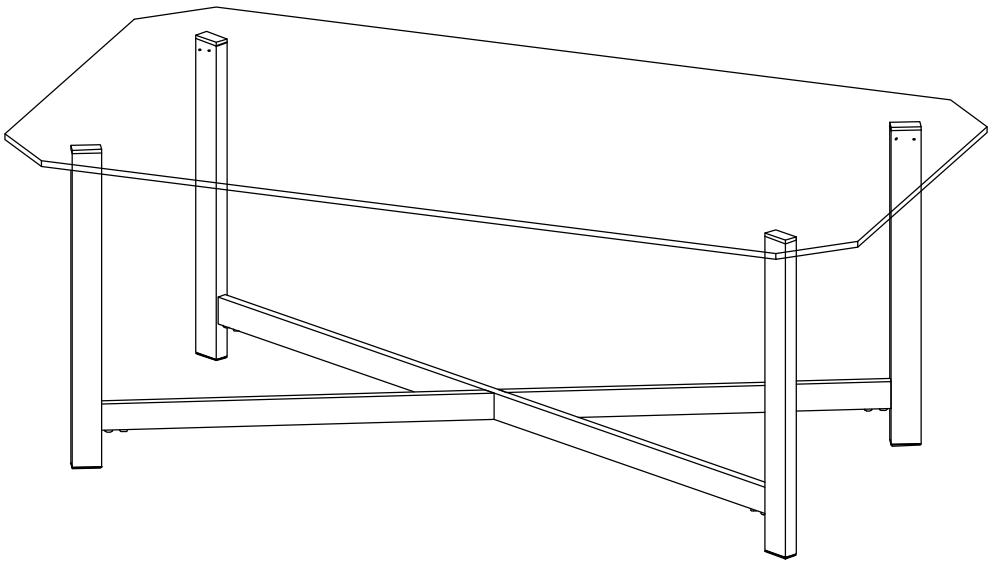

ITEM:706568

ASSEMBLY INSTRUCTIONS

Product Size : 1220 X 660 X 464 H (MM)
Product Size : 48" X 26" X 18.25"

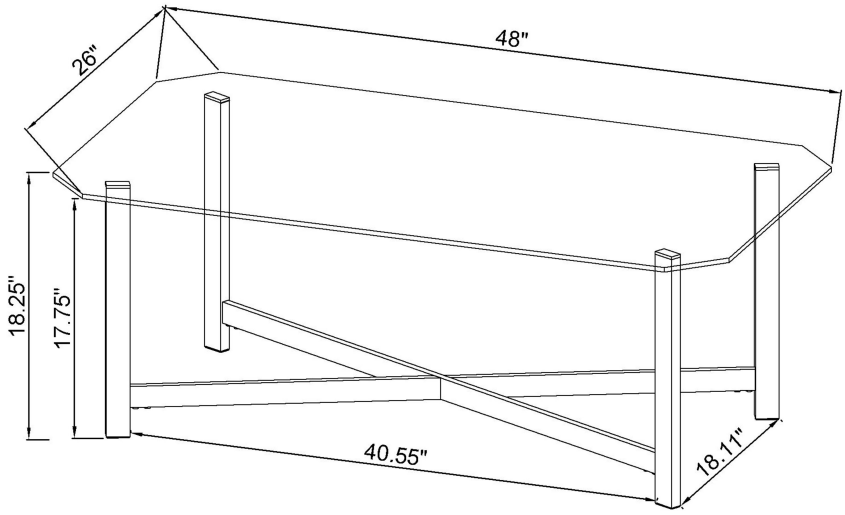

Note:Dimension tolerance±5%