TOV

Follow us!

Show your new purchase some love by tagging it on our Instagram!

@tovfurniture

516-888-3355

hello@tovfurniture.com

www.tovfurniture.com

If the future is female—your furniture should be, too. No mahogany in sight. Sexy settees shaped like lips. Price points for any budget. At TOV, we do things differently.

TOV

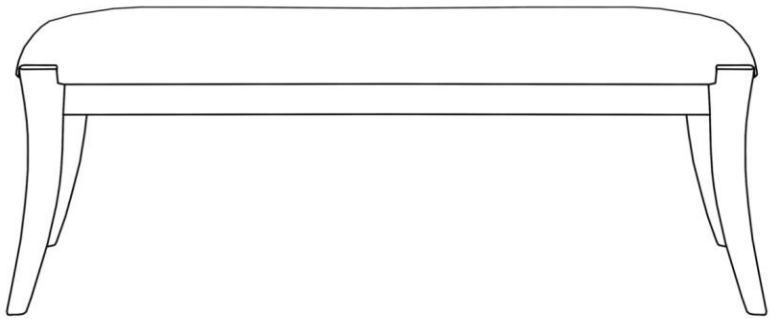

Arielle Embroidered Bench

DON'T BE BORING.

Hardware and Components

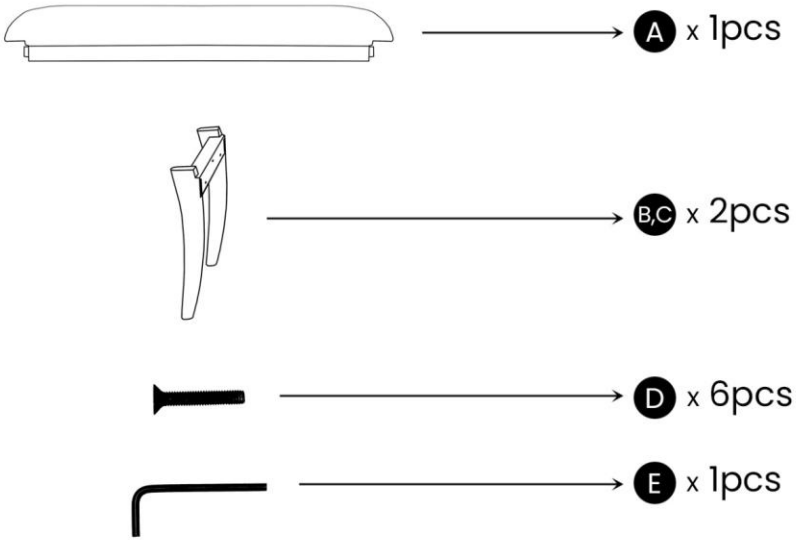

Step 1

Open box of hardware and legs.

This hardware box will be a smaller box inside of the main box.
Look for the red streamer.

Step 2

A. Place Bench Frame base (A) on the floor upside down.

B. Align Legs (B & C) on side of the bench frame. Carefully align the holes of both legs one by one so that it fits properly.

C. Using hardware (D,E), secure the Legs with Bench frame as shown below.

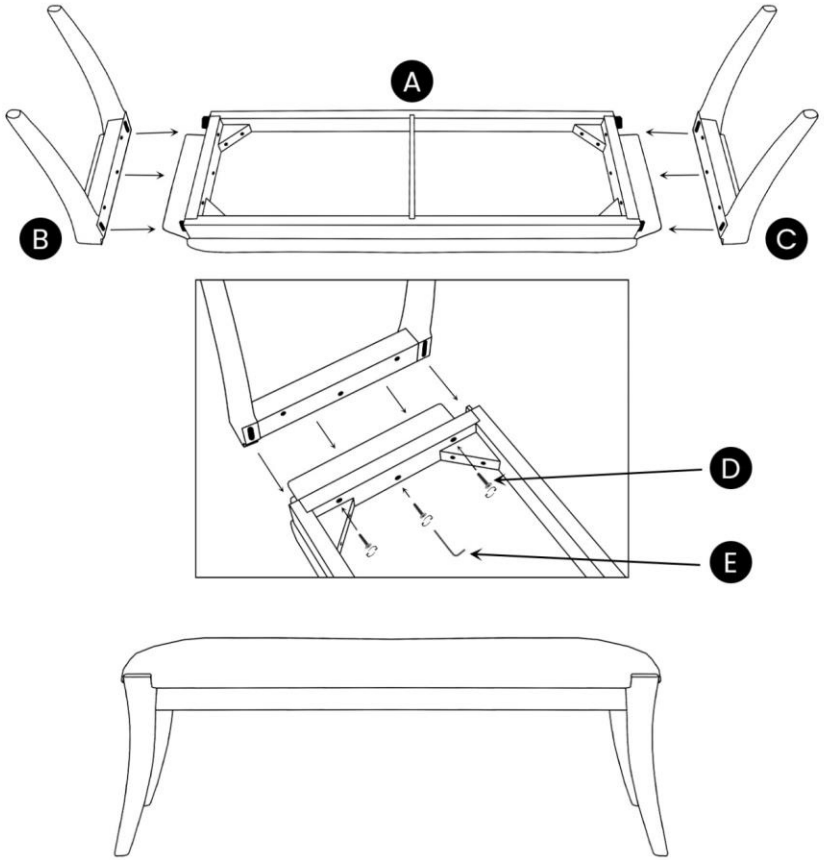

Stuck?
Contact our team @ 516-888-3355

Scan for product care!