STEP 9 Assemble panel no. **3**, **4**, **11**, **12**, **13**, **14** & **15**. Use Allen Key **(N1)** to tighten the Crosshead Screw m6.3 x 40mm **(A17)**. Then, button the screw head with Crosshead Cover **(Y)**.

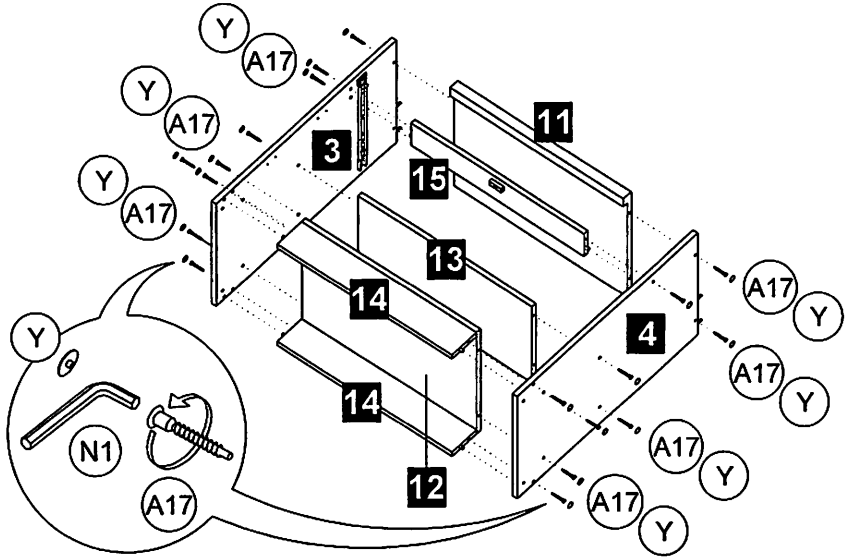

STEP 10 Assemble the upper unit to the main unit by using Mini Fix 15mm **(F2)**. Assemble the L Bracket **(R1)** at between panel no. **12** & **14**. Assemble the U Shape Caster Wheel **(W3)** at the bottom of panel no. **3** & **4**.

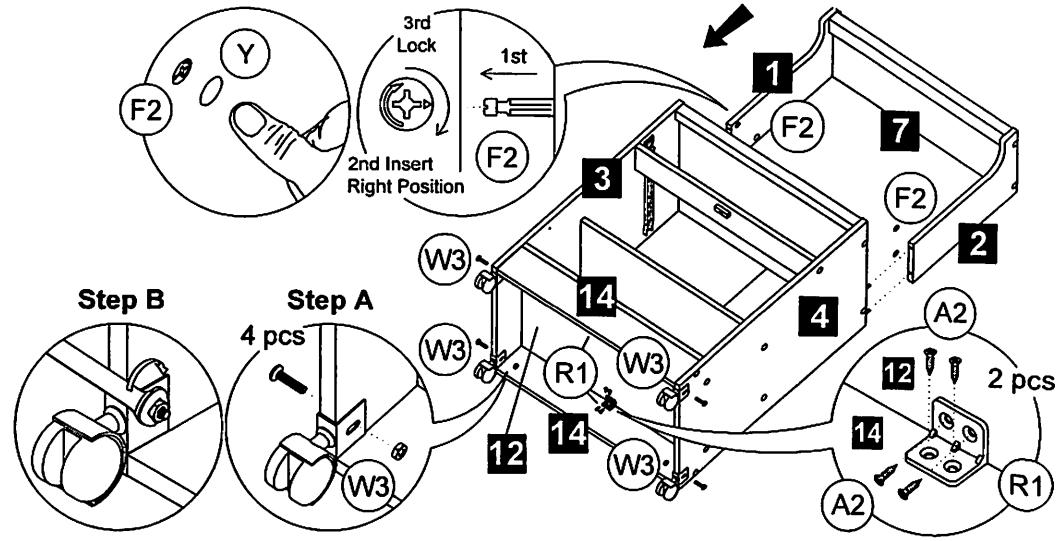

STEP 11 Attach the back panel no. **17** & **18** by Nail **(N3)** & use Screw m3.5 x 14mm **(A2)** to screw the back panel to panel no. **11**.

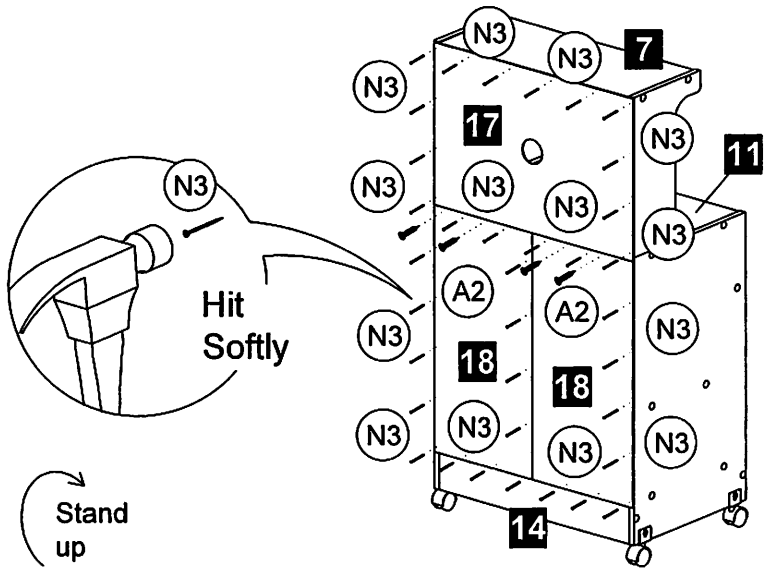

STEP 12 Insert the drawer & attach the door. Adjust the Hinges **(E9)** screw to parallel between the door gap.

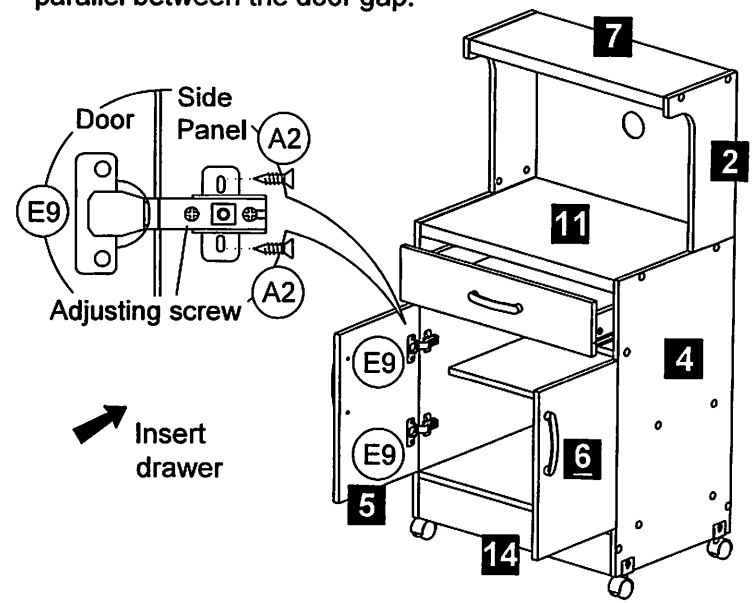

STEP 5 Insert the Mini Fix Cam **(F2)** at panel no. **1** & **2**. Insert the Door Stopper **(S2)** at panel no. **15**. Insert Wood Dowel 8 x 25mm **(D6)** at panel no. **14** & **15**.

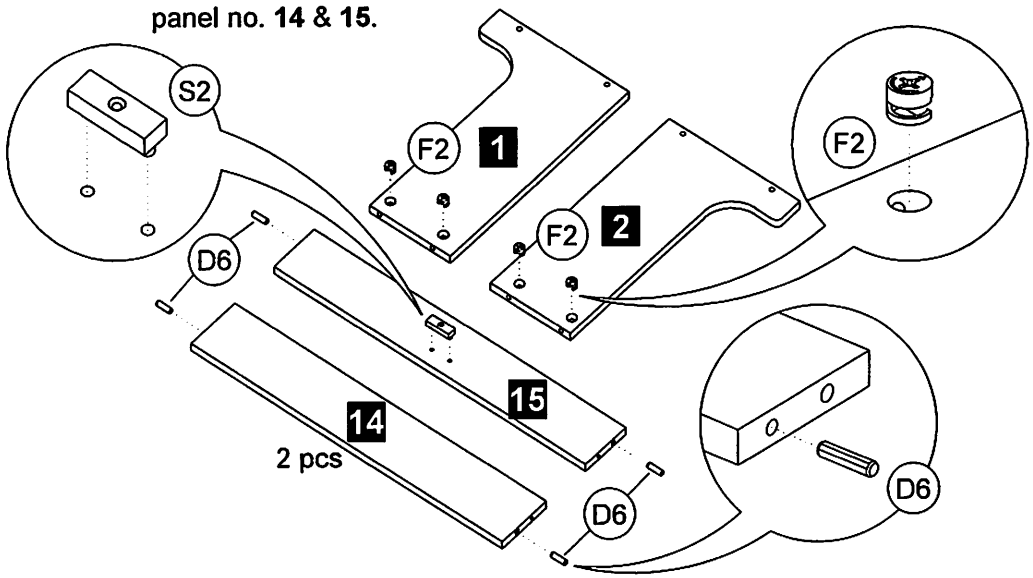

STEP 6 Assemble each hardware with a different size screw at door panel no. **5** & **6**.

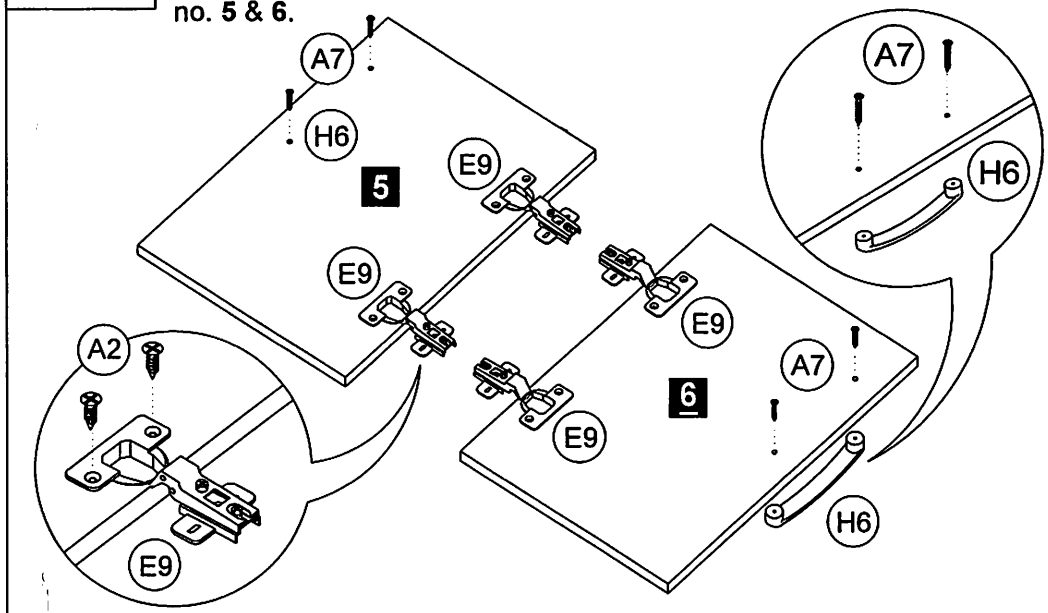

STEP 7 Use Euro Screw **(A34)** to assemble left & right Drawer Metal Slide 350mm **(M6)** at marking hole panel no. **3** & **4**. Then, insert Mini Fix Bolt **(F2)**.

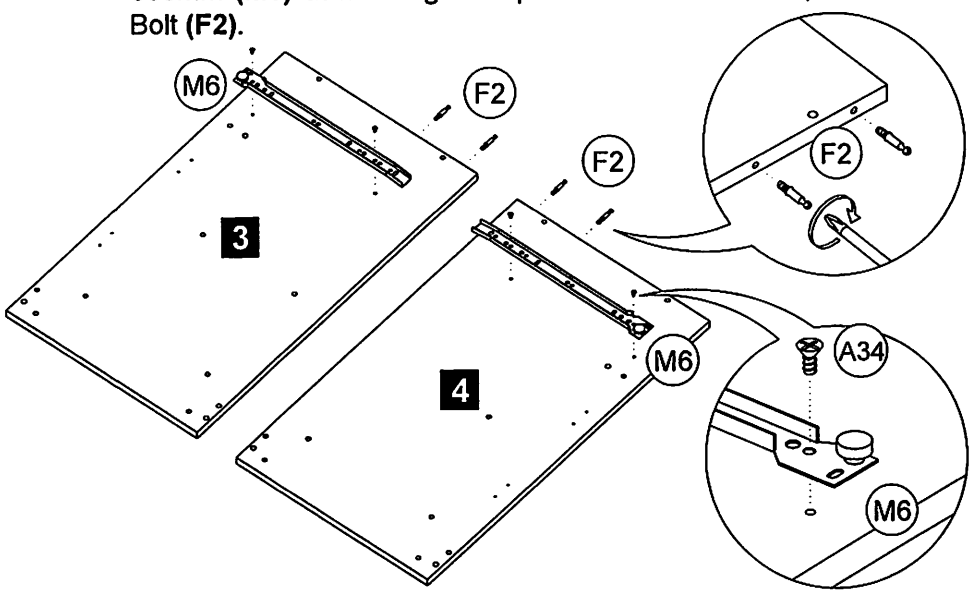

STEP 8 Assemble panel no. **1**, **2**, & **7**. Use Allen Key **(N1)** to tighten the Crosshead Screw m6.3 x 40mm **(A17)**. Then, button the screw head with Crosshead Cover **(Y)**.

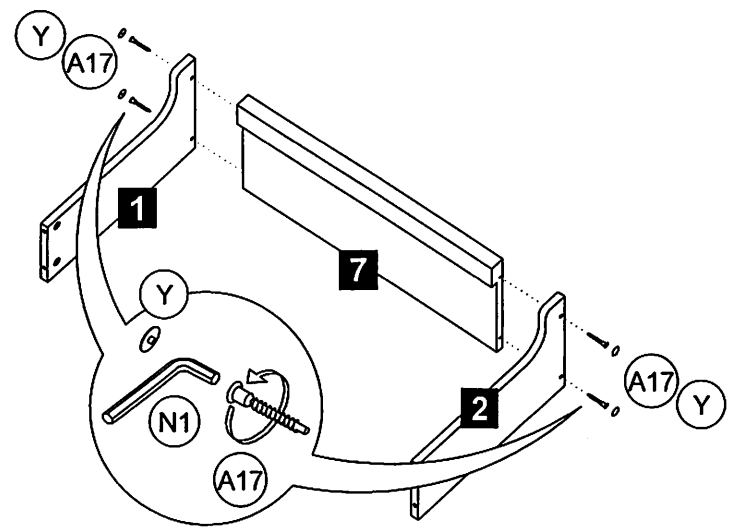

STEP 1 Fix the Mini Fix Bolt **(F2)** and use Screw m4 x 30mm **(A7)** to secure the Handle **(H6)** at panel no. **8**. Insert Mini Fix Cam **(F2)** at panel no. **9** & **10**. Then, insert Wood Dowel 6 x 25mm **(D4)** at panel no. **9** & **10**.

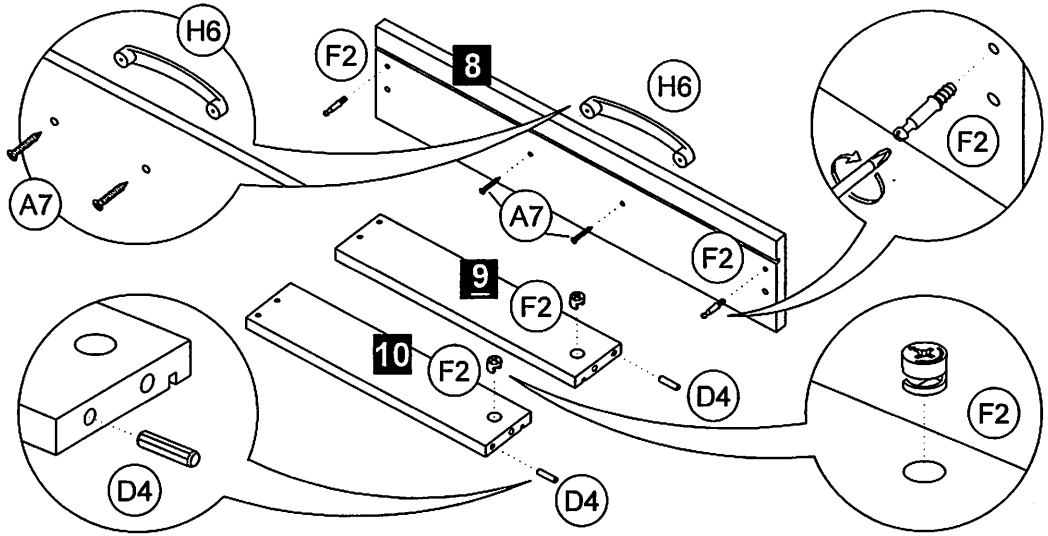

STEP 2 Use Screw m4 x 38mm **(A10)** to assemble the drawer frame.

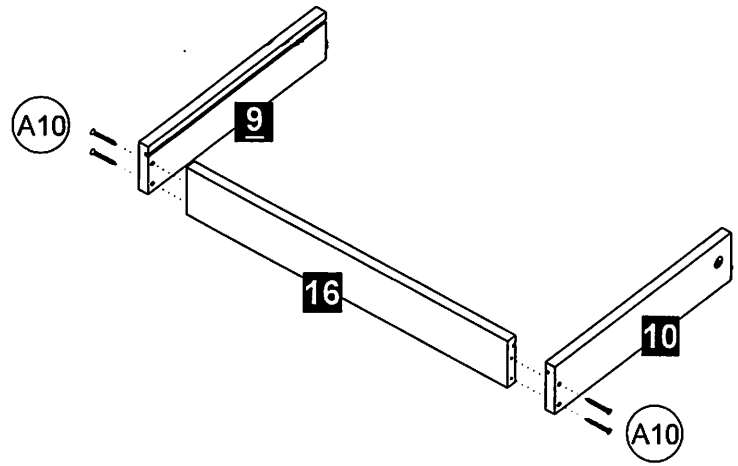

STEP 3 Slide the panel no. **19** along the groove until end. Then, assemble panel no. **8** by using Mini Fix 15mm **(F2)**.

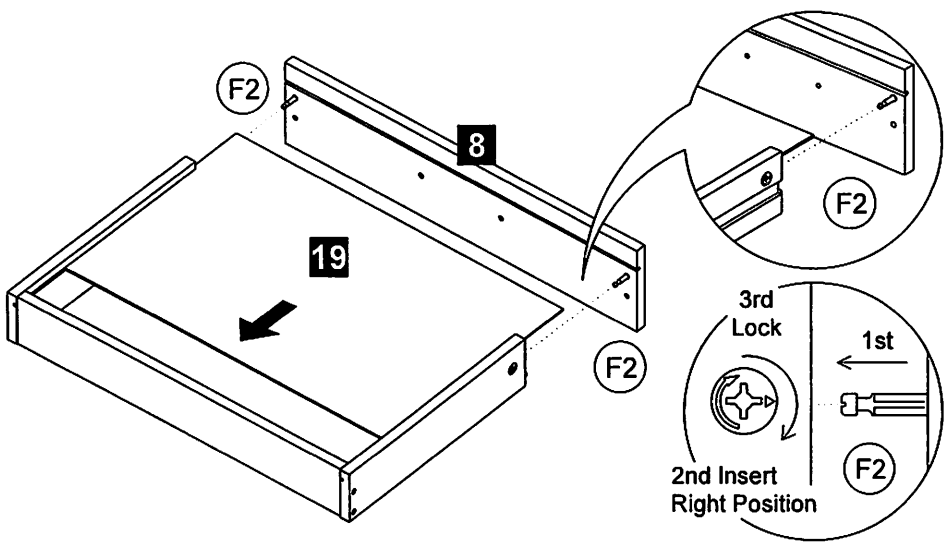

STEP 4 Use Screw m3.5 x 14mm **(A2)** to assemble the Drawer Metal Slide 350mm **(M6)** & Single Plastic Cap **(R2)**.

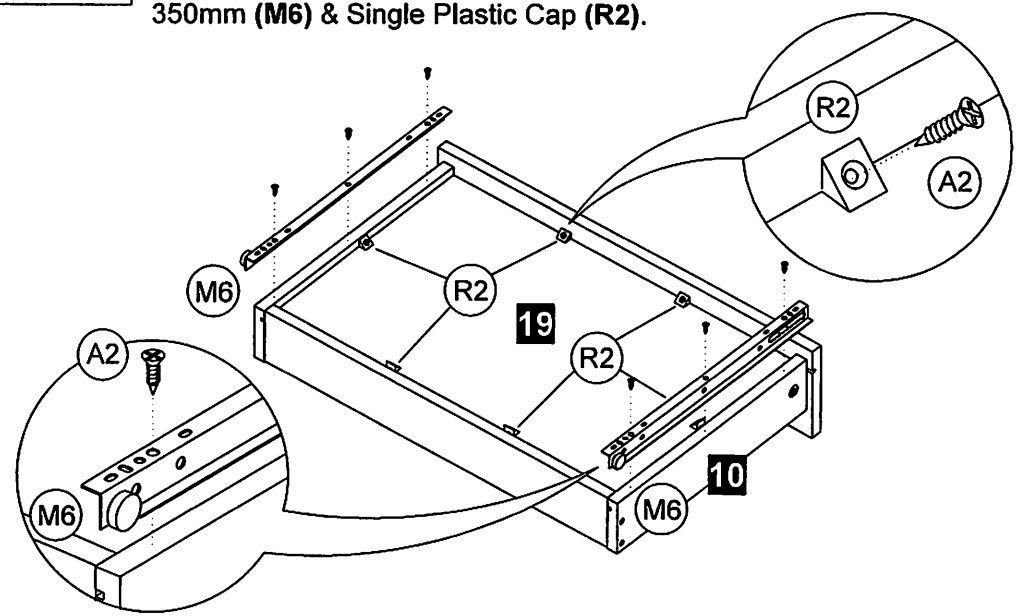

Reference Screw Size. Place your screw on top to identify the size

A2

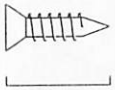

Screw
m3.5 x 14mm

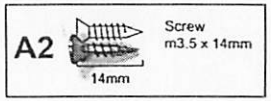

A7

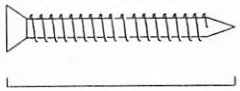

Screw
m4 x 30mm

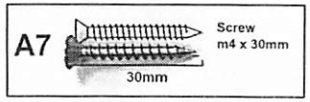

A10

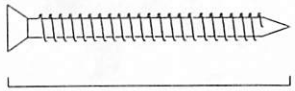

Screw
m4 x 38mm

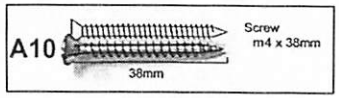

A17

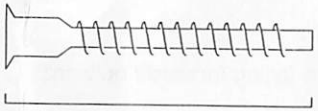

Crosshead Screw
6.3 x 40mm

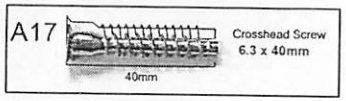

A34

Euro Screw
m5 x 8mm

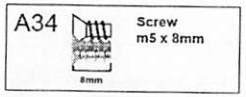

Before you begin, please follow assembly instruction carefully, then follow step by step.

Read instruction carefully. See furniture Parts List and Hardware List for guidance. Be sure you have all parts before you start assembling. Place and assemble furniture on a clean flat soft surface, such as carpet, rug or carton to prevent being scratched.

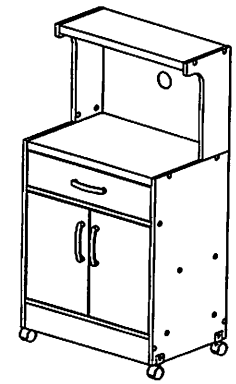

Reminder :

Please ensure that all surface and edges with colours / laminations are facing forward / outward.

HARDWARE LIST			QTY
A2		Screw m3.5 x 14mm	40
A7		Screw m4 x 30mm	6
A10		Screw m4 x 38mm	4
A17		Crosshead Screw 6.3 x 40mm	22
A34		Euro Screw m5 x 8mm	4
D4		Wood Dowel 6 x 25mm	2
D6		Wood Dowel 8 x 25mm	6
E9		Hinges 7/8	4
F2		Mini Fix 15mm	6 Sets

H6		Handle 128mm (Silver)	3
M6		Drawer Metal Slide 350mm	1 Set
N1		Allen Key	1
N3		Nail	35 (+-3)
R1		L Bracket	2
R2		Single Plastic Cap	6
S2		Door Stopper Big	1
W3		U Shape Caster Wheel	1 Set
Y		Crosshead Cover / Mini Fix Cap	26

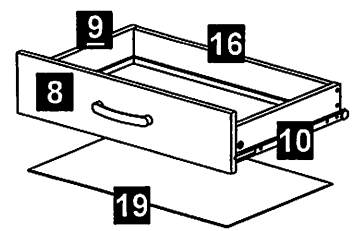

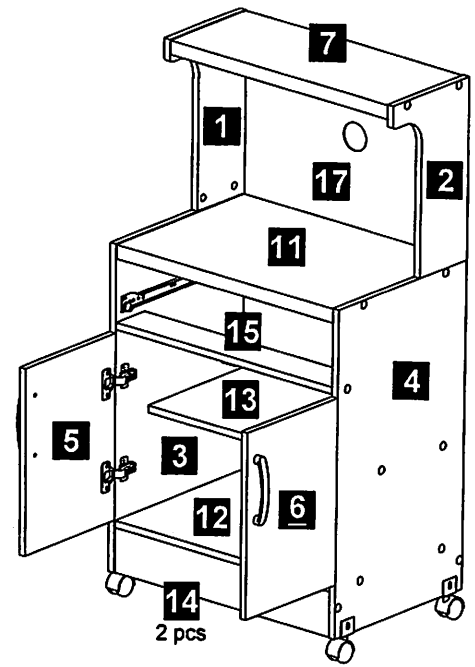

Each pack have contain different type hardware and size of screw for easy assemble.
Please refer to page 2, check a screw size.

CAUTION

MATERIAL USE LAMINATED PARTICLE BOARD, TO CLEAN USE SOFT, DRY CLOTH. DO NOT USE DETERGENT OR CHEMICAL AVOID CONTACT WITH WATER AND DIRECT SUNLIGHT. TO BE ASSEMBLED ON A SOFT, DRY, CLEAN SMOOTH SURFACE.

USE OF POWER TOOLS TO ASSEMBLE THIS PRODUCT WILL INVALIDATE ANY CLAIM AND MAY DAMAGE THIS PRODUCT MAKING IT UNSAFE.