FLYNN # 966-07EK-HB / 966-W-07EK-HB EAST.KING HB / WHITE EAST.KING HB

FLYNN # 966-07EK-HB / 966-W-07EK-HB EAST.KING FB / WHITE EAST.KING FB

FLYNN # 966-07EK-RS / 966-W-07EK-RS EAST.KING RAILS / WHITE EAST.KING RAILS

ALPINE FURNITURE

Assembly Instruction

A . Components :

1.	Headboard Panel	1 x
2.	Footboard Panel	1 x
3.	Bed Rail	2 x
4.	Slat	4 x
5.	Slat Support	8 x

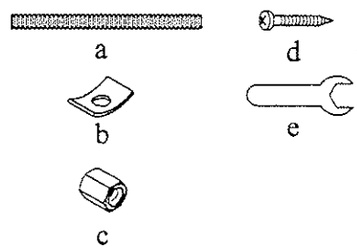

B . Hardware :

a.	Stud Bolt	8 x
b.	Square Washer	8 x
c.	Hex Nut	8 x
d.	Screw	8 x
e.	Wrench	1 x

C . Tool Required :

1. Screw Driver = (not included)

STEP 1

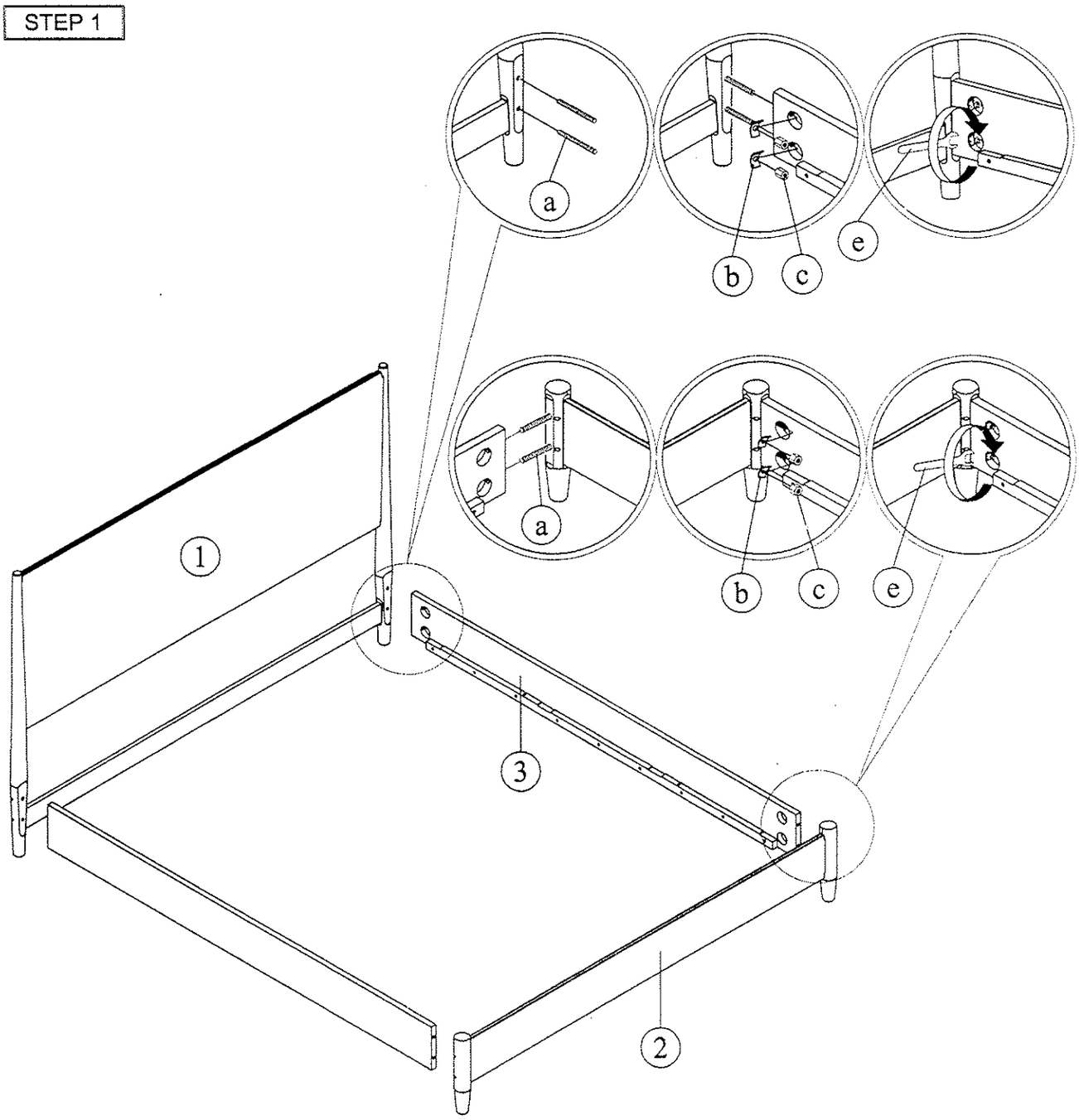

FLYNN # 966-07EK-HB / 966-W-07EK-HB EAST.KING HB / WHITE EAST.KING HB

FLYNN # 966-07EK-HB / 966-W-07EK-HB EAST.KING FB / WHITE EAST.KING FB

FLYNN # 966-07EK-RS / 966-W-07EK-RS EAST.KING RAILS / WHITE EAST.KING RAILS

ALPINE FURNITURE

STEP 2

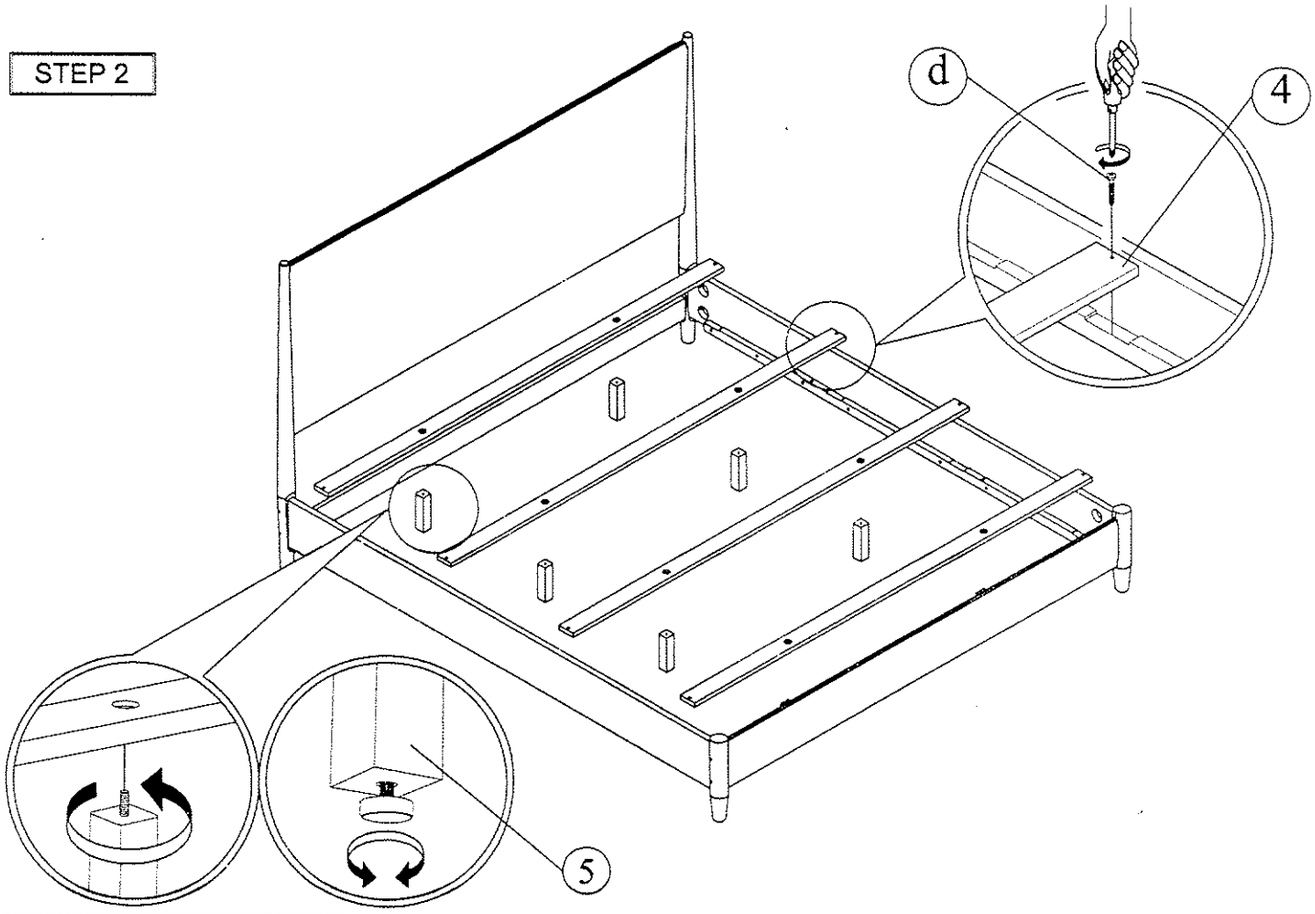
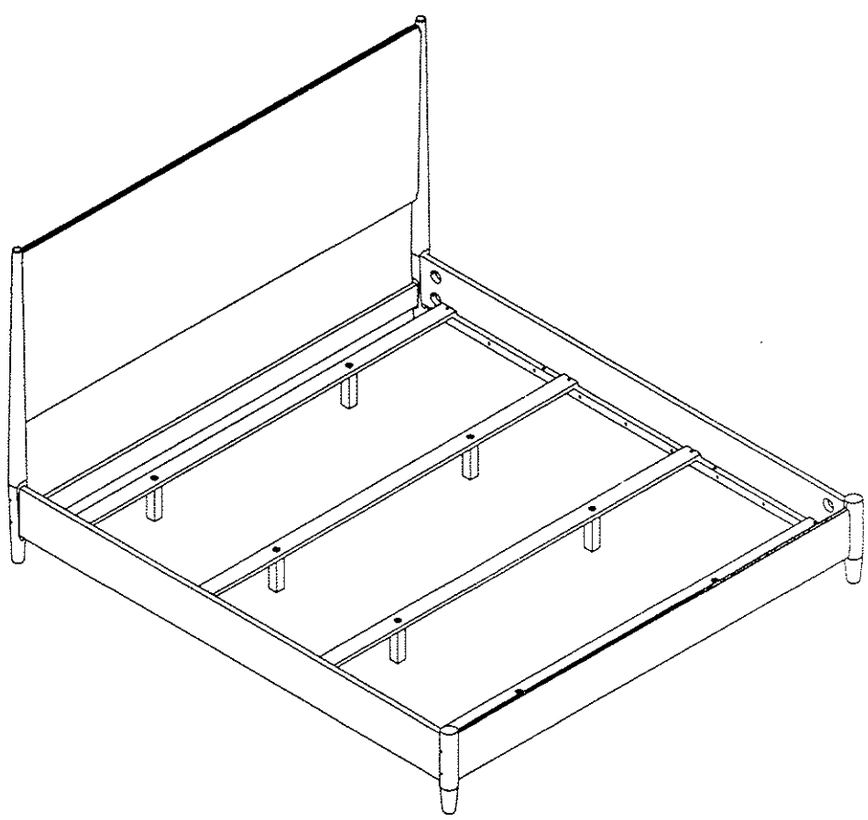
STEP 3