ASSEMBLY INSTRUCTIONS

ITEM# 30055-C LEO 2 ACCENT CHAIR

Please read instructions carefully

Remove all wrapping materials, staples and packing straps from the carton. Refer to Parts List and Hardware List and ensure they are complete before you start assembling. Place all wooden parts on a clean, flat and soft surface (e.g carpet or rug) to prevent parts from being scratched.

CAUTIONS:
1) DO NOT FULLY TIGHTEN BOLTS AND NUTS UNTIL ALL PARTS HAVE BEEN ASSEMBLED.
2) DO NOT OVER-TIGHTEN BOLTS AND NUTS UNTIL ALL PARTS HAVE BEEN ASSEMBLED.
3) KEEP ALL HARDWARE PARTS OUT OF REACH CHILDREN.

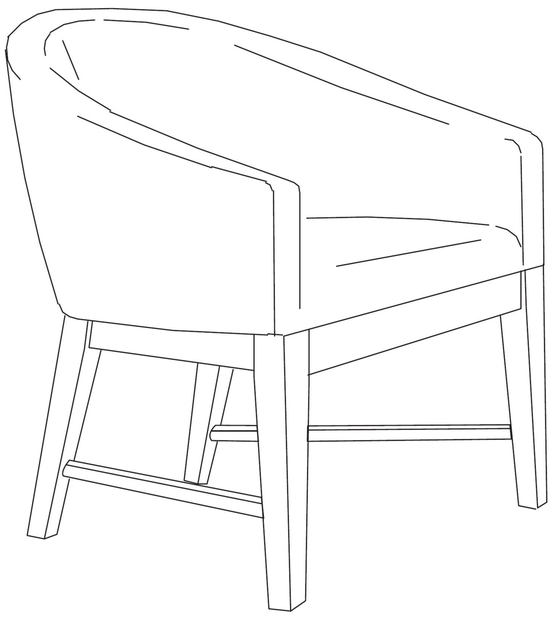

VIEW OF THE COMPLETE ASSEMBLED CHAIR

PART LISTS (FOR 2 NOS. OF CHAIRS)

NO.	COMPONENT	QTY.
P1	CHAIR SEAT FRAME	2
P2	FRONT LEG with sticker (L)	2
P3	FRONT LEG with sticker (R)	2
P4	BACK LEG with sticker (L)	2
P5	BACK LEG with sticker (R)	2
P6	CROSS BAR with sticker (L)	2
P7	CROSS BAR with sticker (R)	2

HARDWARE LISTS (FOR 2 NOS. OF CHAIRS)

NO.	DESCRIPTION	QTY.
H1	M6 x 70 JCBC SCREW	16
H2	SPRING WASHER	16
H3	FLAT WASHER	16
H4	ALLEN KEY	1
H5	SCREW M4 x 38mm	8
H6	NAIL LEG	8

STEP 1

H1 x 4	M6x70mm
H2 x 4	
H3 x 4	

Assemble the Front Leg Right (P3) & the Back Leg Right(P5) into the seat frame (P1) , and simultaneously,assemble the Cross Bar (P7) to the desired holes in both legs, then, align bolt (H1) together with Spring Washer (H2) & Flat Washer (H3). Tighten the bolts using Allen Key (H4) .

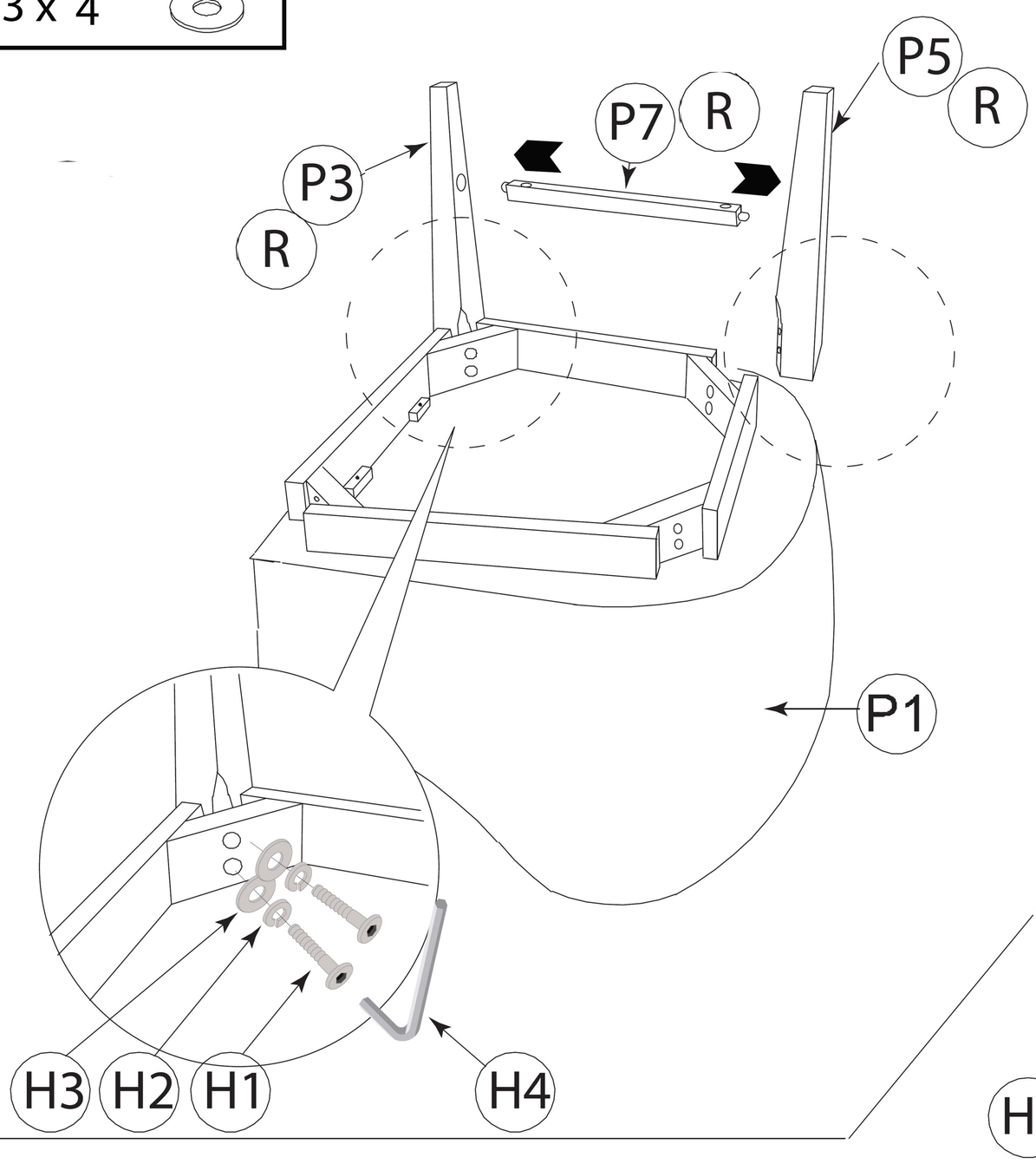

STEP 2

H1 x 4	M6x70mm
H2 x 4	
H3 x 4	

Assemble the Front Legs Left (P2) & the Back leg Left (P4) into the seat frame (P1) , and simultaneously, assemble the Cross bar with sticker (P6) to the provided holes in both legs. Then, align bolt (H1) together with Spring washer (H2) & Flat washer (H3). Tighten the bolts using Allen key (H4).

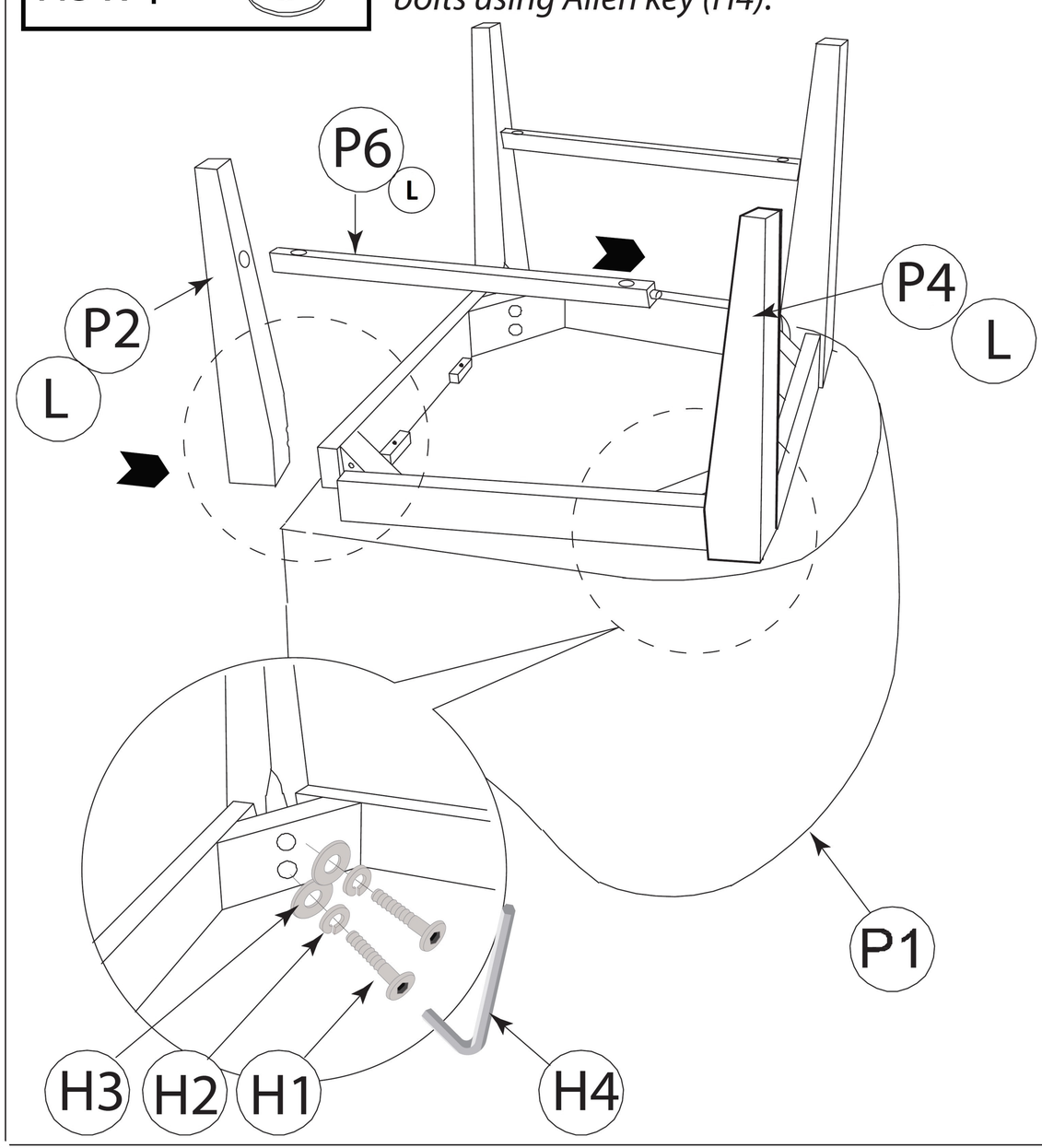

STEP 3

H5 x 4	
H6 x 4	

Fit the Cross bar with sticker(P6) & Cross bar (P7) using Screw (H5). Use a household Screw driver to tighten screws.
Before turning the chair upright, tap the Nail leg (H6) to the base of each chair leg.

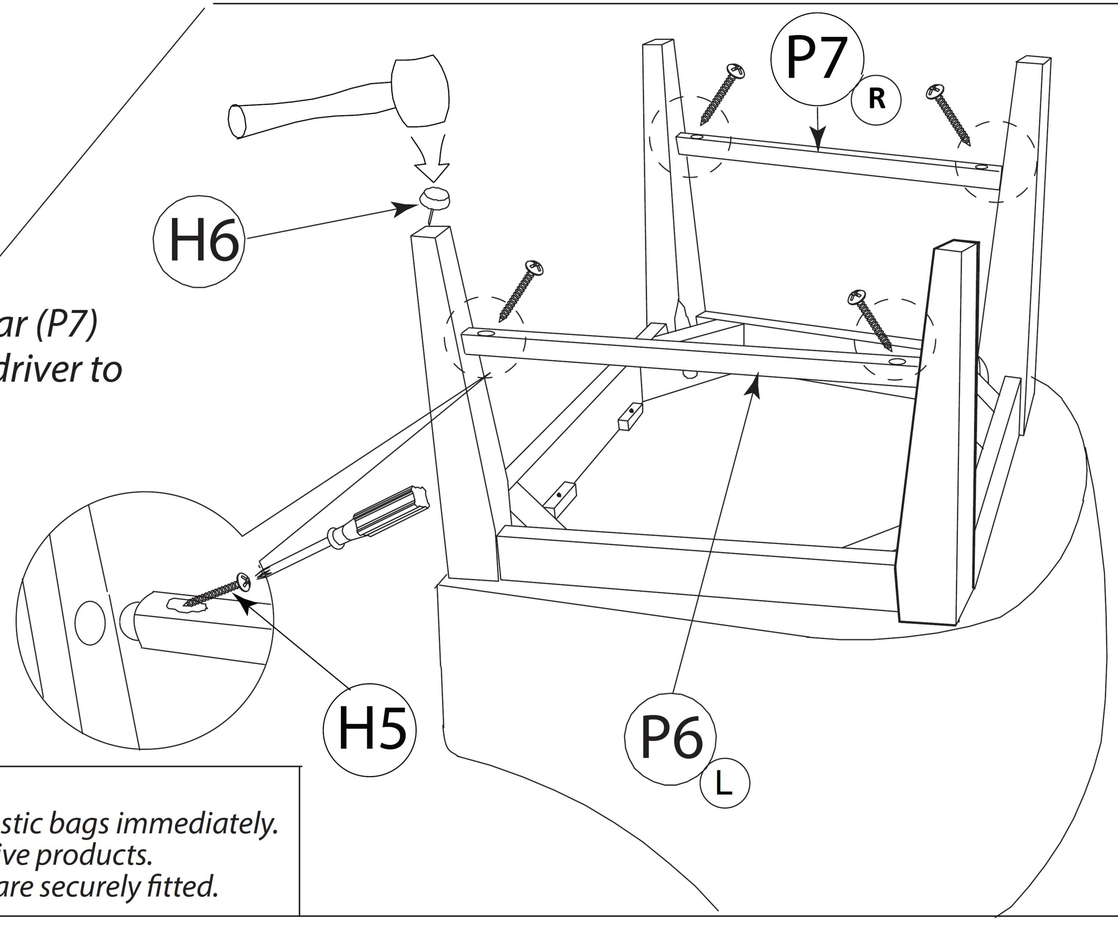

CARE AND MAINTENANCE

SAFETY - To avoid any risk of suffocation to children and animals, dispose off plastic bags immediately.
CLEANING - Clean with damp cloth and mild detergent. Do not use bleach or abrasive products.
FITTINGS - Tighten bolts and nuts from time to time to ensure all parts of product are securely fitted.