ASSEMBLY INSTRUCTIONS

TOOLS REQUIRED

Allen Wrench

(Included)

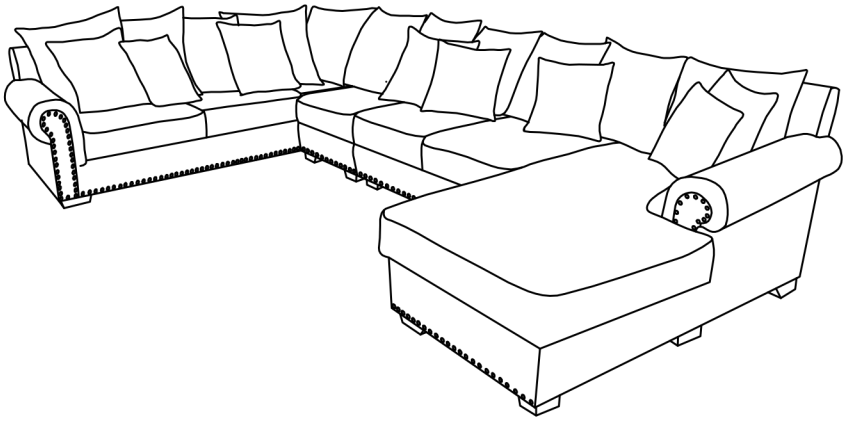

2 - People Recommended

ASSEMBLY RATING

EASY ——► DIFFICULT

The Assembly Rating is a 5-point system showing the level of effort needed to assemble a specific product.

VERSION # 19-11-13

CHECK BEFORE STARTING

- [ ] **Are you missing anything?**

  Double-check all parts, hardware and accessories listed on Page 6 are accounted for.

- [ ] **Should we send any replacements?**

  Are there any irregularities or flaws in the parts? We can send replacements!

- [ ] **Check out our Quick Tips!**

  We recommend reviewing the pre-assembly handouts. Even experts need a refresher now and then!

- [ ] **Prep Time!**

  Please review the assembly instructions and all diagrams prior to assembling. Arrange parts as recommended on Page 7 and group identical hardware together to make assembling easier.

PRE ASSEMBLY INTRODUCTION

We understand building ready-to-assemble furniture can be a challenging experience for some. To help avoid confusion, we have provided some helpful tips that may speed up the process.

Teamwork

ALWAYS have at least two people to help with transporting and assembling the product to avoid potential injury and/or damage.

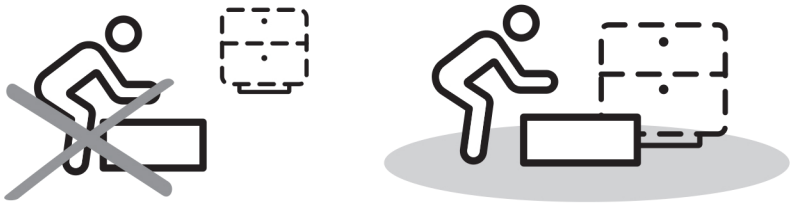

Suitable Location

Assembling near the area of the intended location is highly recommended.

Sufficient Space

Make sure you have enough space to move around during the assembly.

Avoid Scratches

Use cardboard, blankets or a carpeted area while assembling furniture to prevent scratches.

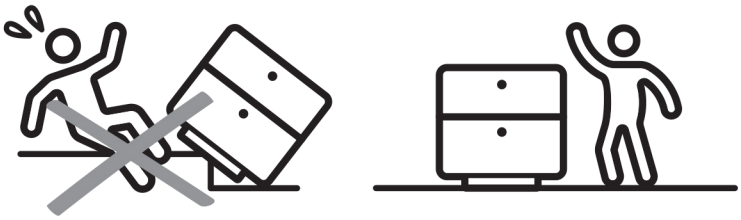

Flat Surface

Make sure the furniture rests on a flat and level surface with each leg evenly touching the floor.

ASSEMBLY AND CARE ADVICE

FAILURE TO FOLLOW THE GUIDELINES BELOW MAY RESULT IN INJURY AND/OR PROPERTY DAMAGE.

Position each part correctly and insert screws or bolts into their respective holes.

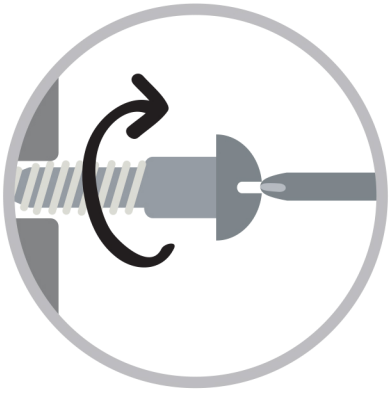

Turn clockwise to tighten and only tighten when step is completed or when instructed to do so.

Use the appropriate hand tools or power tools for assembly. Select steps, such as tightening screws and/or bolts, may require hand tools to avoid causing damage during assembly.

Save the instructions and store any supplied tools for later maintenance.

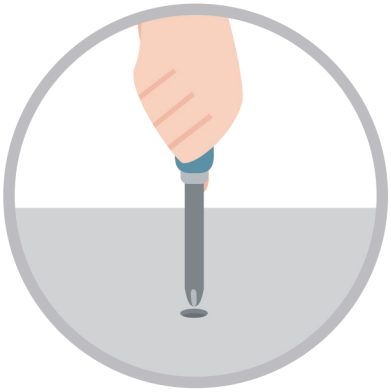

After two weeks, check and tighten any loose hardware and repeat again every six months thereafter.

IT IS THE USER'S RESPONSIBILITY TO MAINTAIN THE FURNITURE. THE HARDWARE MAY LOOSEN OVER TIME AND MAY CAUSE THE FURNITURE TO BE WOBBLY AND UNABLE TO SUPPORT ITS INTENDED WEIGHT CAPACITY. THIS MAY LEAD TO COLLAPSE AND MAY CAUSE SERIOUS INJURY.

SOFA

CM6156

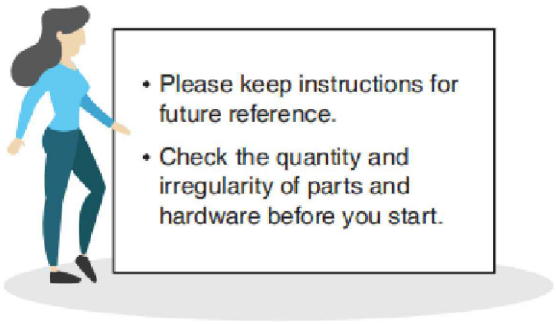

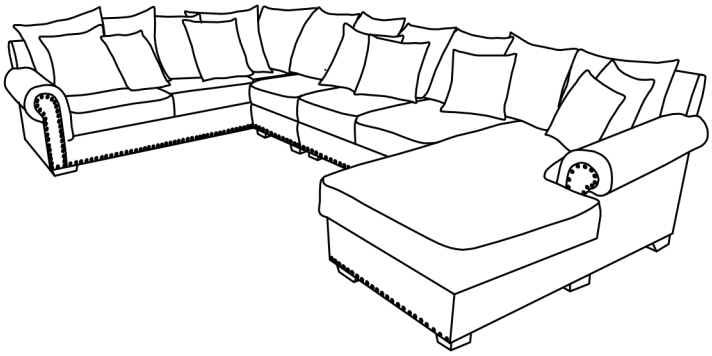

PARTS

#1 1pc

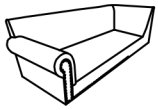

Left Sofa

#2 2pcs

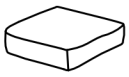

Sofa Seat Cushion 1

#3 1pc

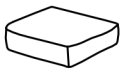

Sofa Seat Cushion 1

#4 1pc

Armless Chair

#5 1pc

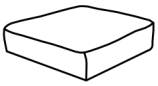

Chair Seat Cushion

#6 1pc

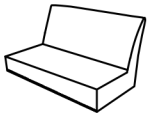

Loveseat

#7 2pcs

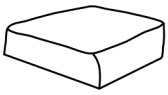

Loveseat Seat Cushion

#8 1pc

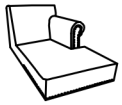

Right Chaise

#9 1pc

Chaise Seat Cushion

#10 11pcs

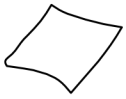

Big Pillow

#11 4pcs

Small Pillow

#12 4pcs

Flower Pillow

#13 17pcs

Leg

#14 1pc

Support Leg

HARDWARE

#A 17pcs	#B 17pcs	#C 17pcs	#D 1pc
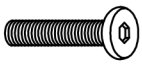			
Bolt Ø5/16" x 3-1/2"	Lock Washer Ø5/16"	Flat Washer Ø5/16"	Allen Key 5mm

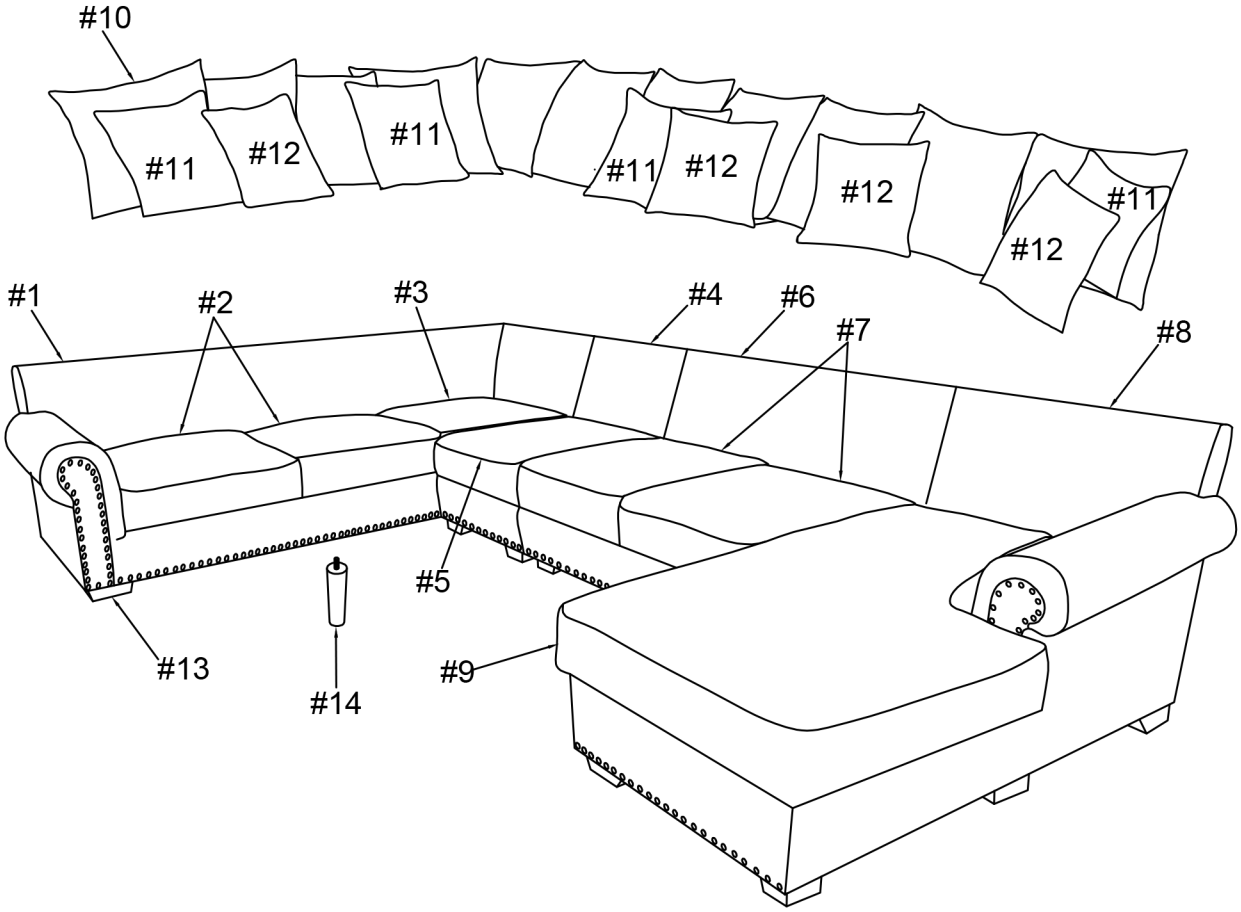

Exploded View

1

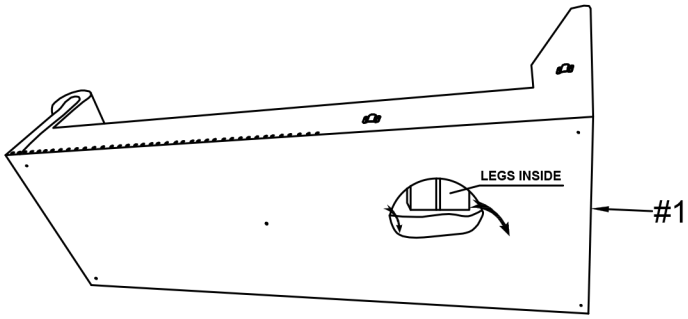

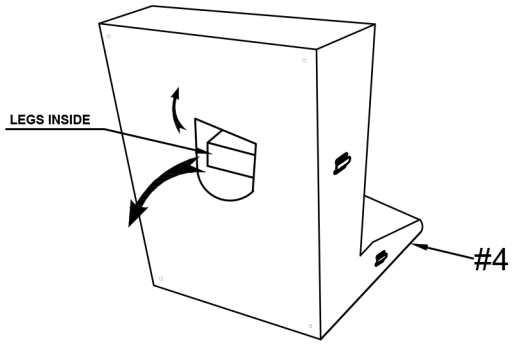

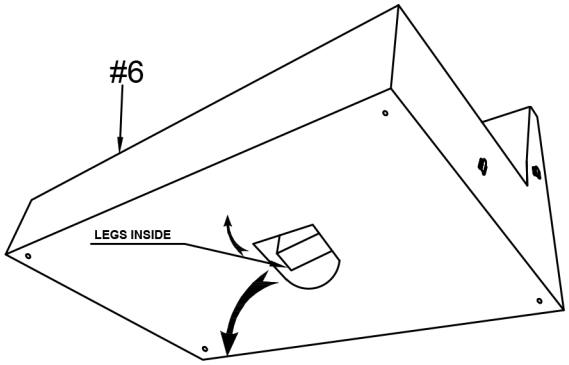

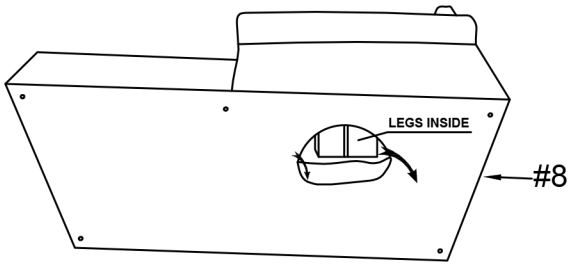

2

Part #1 x1pc
Part #13 x4pcs
Part #14 x1pc
Hardware #A x4pcs
Hardware #B x4pcs
Hardware #C x4pcs

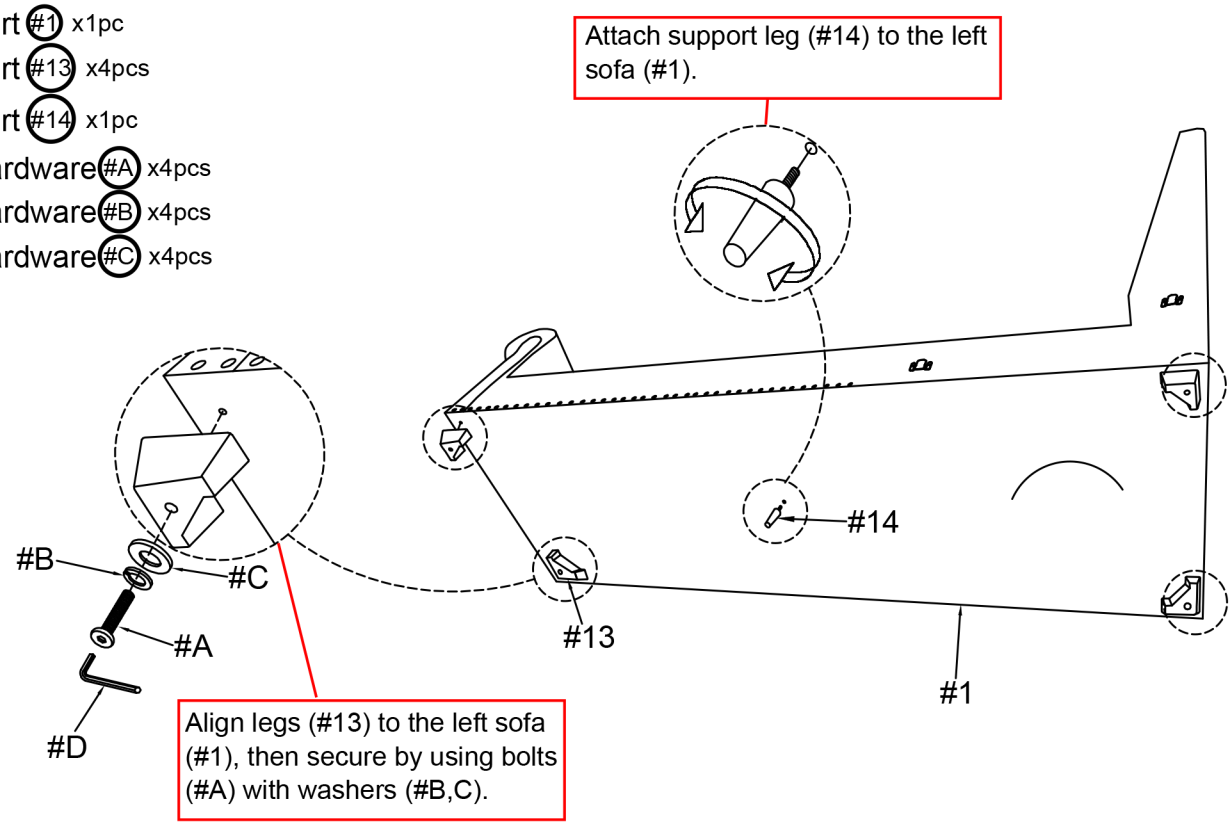

ASSEMBLY INSTRUCTIONS

3

Part #2 x2pcs
Part #3 x1pc

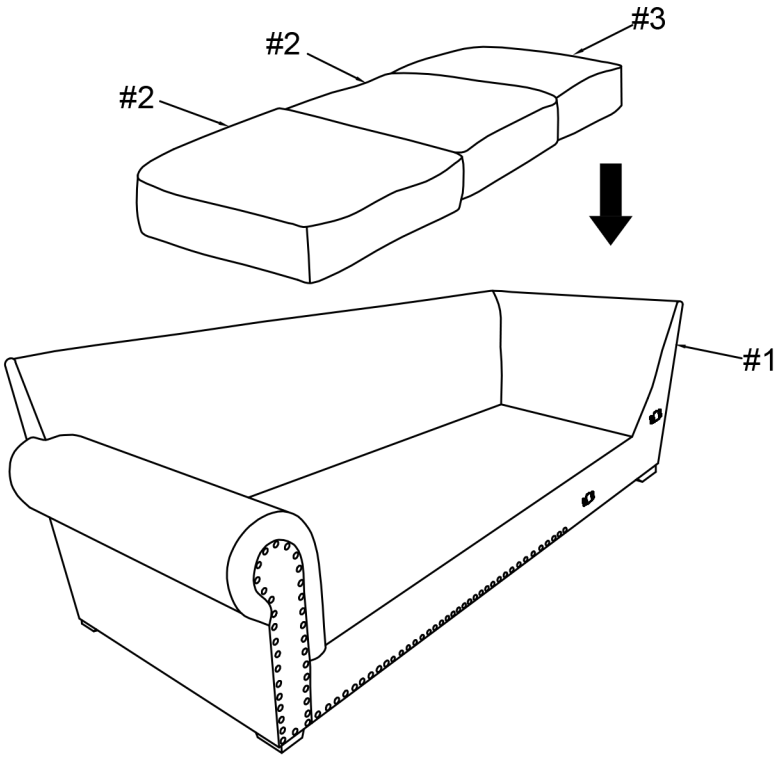

4

Part #4 x1pc
Part #13 x4pcs
Hardware #A x4pcs
Hardware #B x4pcs
Hardware #C x4pcs

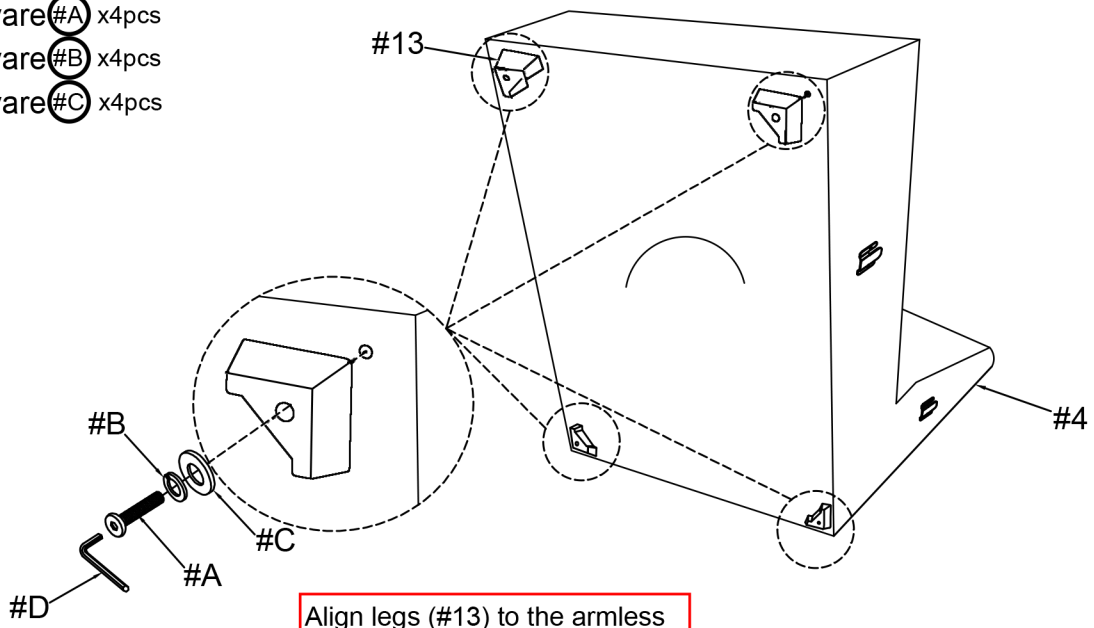

Align legs (#13) to the armless chair (#4), then secure by using bolts (#A) with washers (#B,C).

ASSEMBLY INSTRUCTIONS

5

Part #5 x1pc

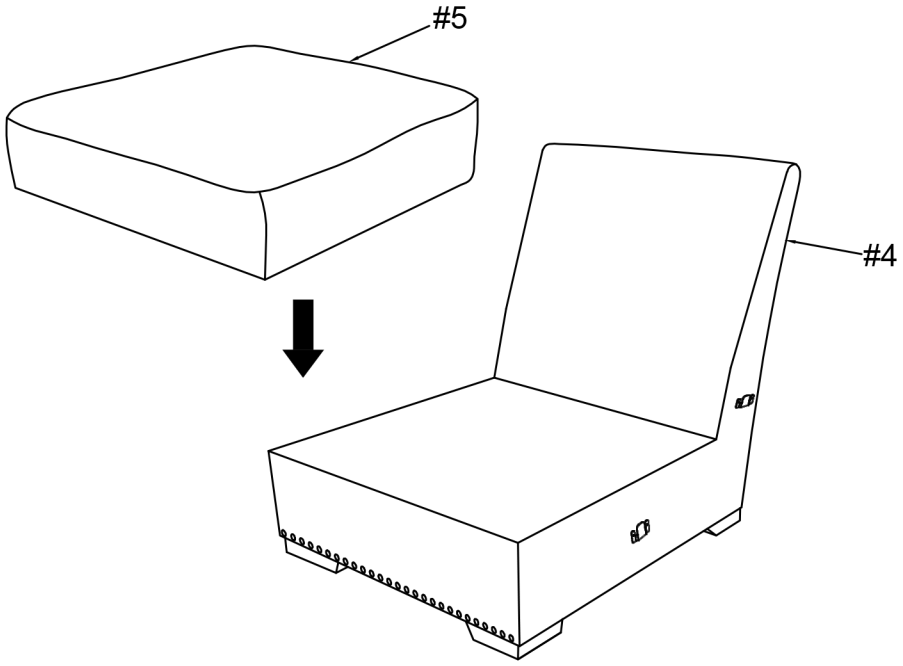

6

Part #6 x1pc
Part #13 x4pcs
Hardware #A x4pcs
Hardware #B x4pcs
Hardware #C x4pcs

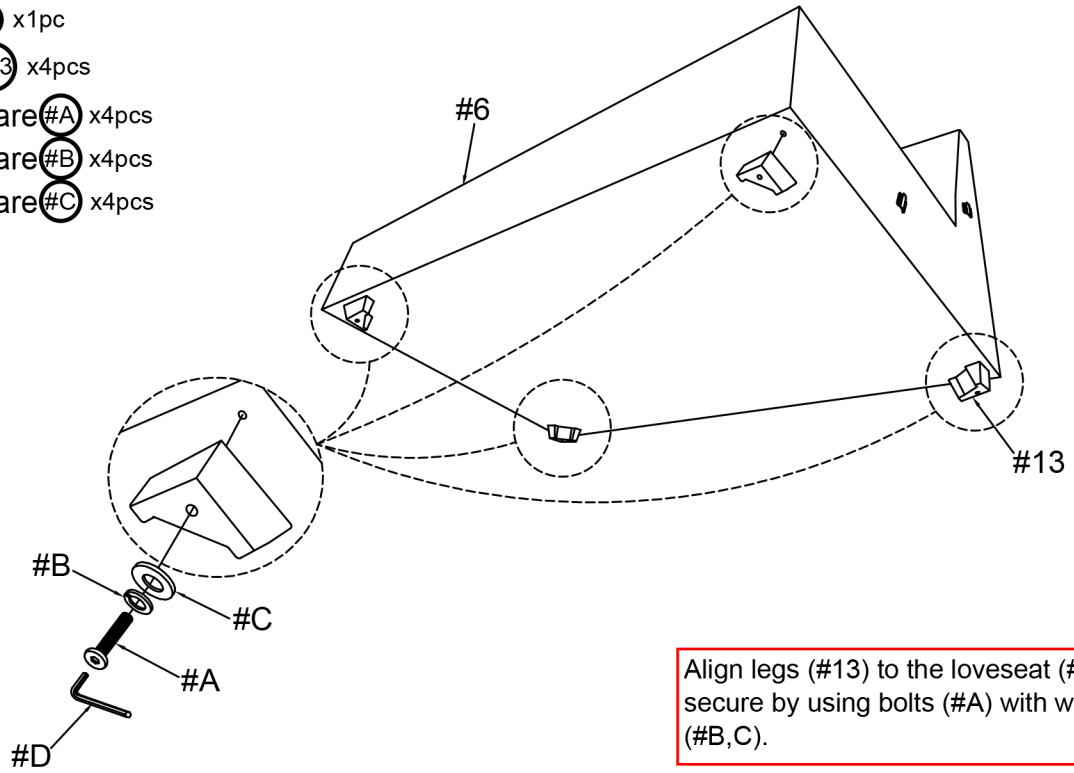

Align legs (#13) to the loveseat (#6), then secure by using bolts (#A) with washers (#B,C).

ASSEMBLY INSTRUCTIONS

7

Part #7 x2pcs

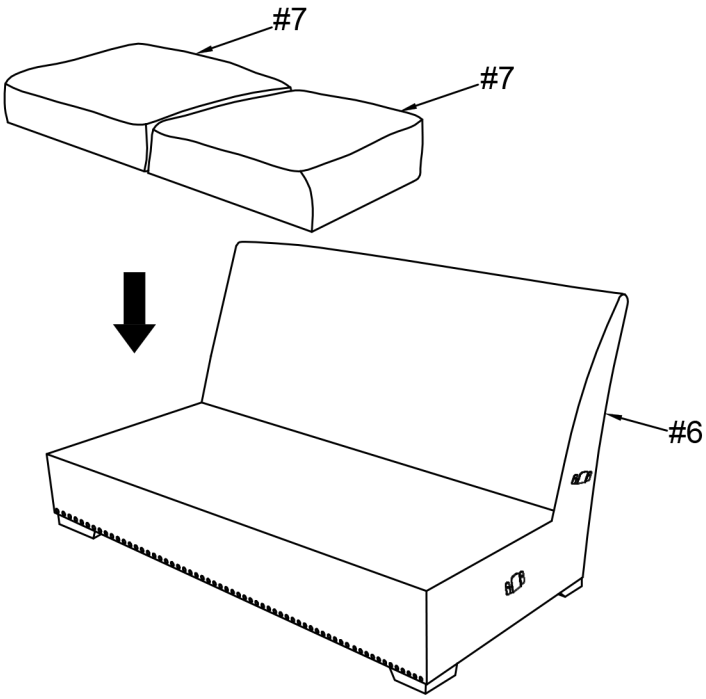

8

Part #8 x1pc
Part #13 x5pcs
Hardware #A x5pcs
Hardware #B x5pcs
Hardware #C x5pcs

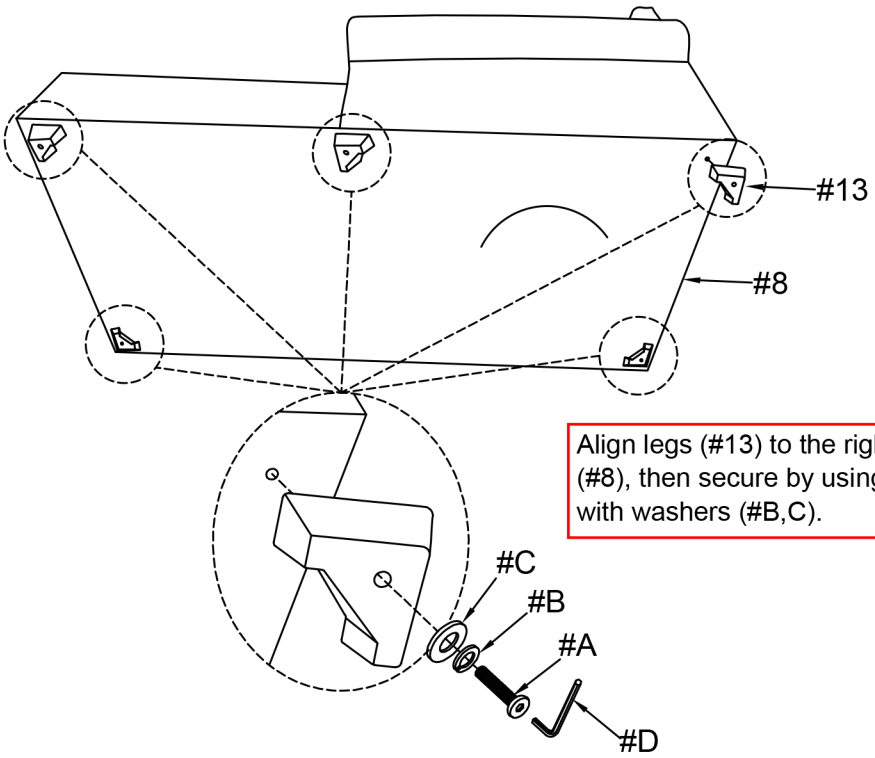

Align legs (#13) to the right chaise (#8), then secure by using bolts (#A) with washers (#B,C).

ASSEMBLY INSTRUCTIONS

9

Part #9 x1pc

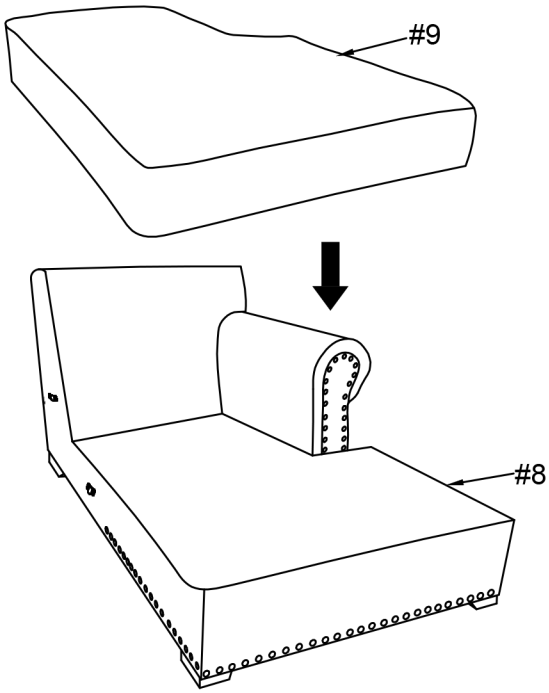

10

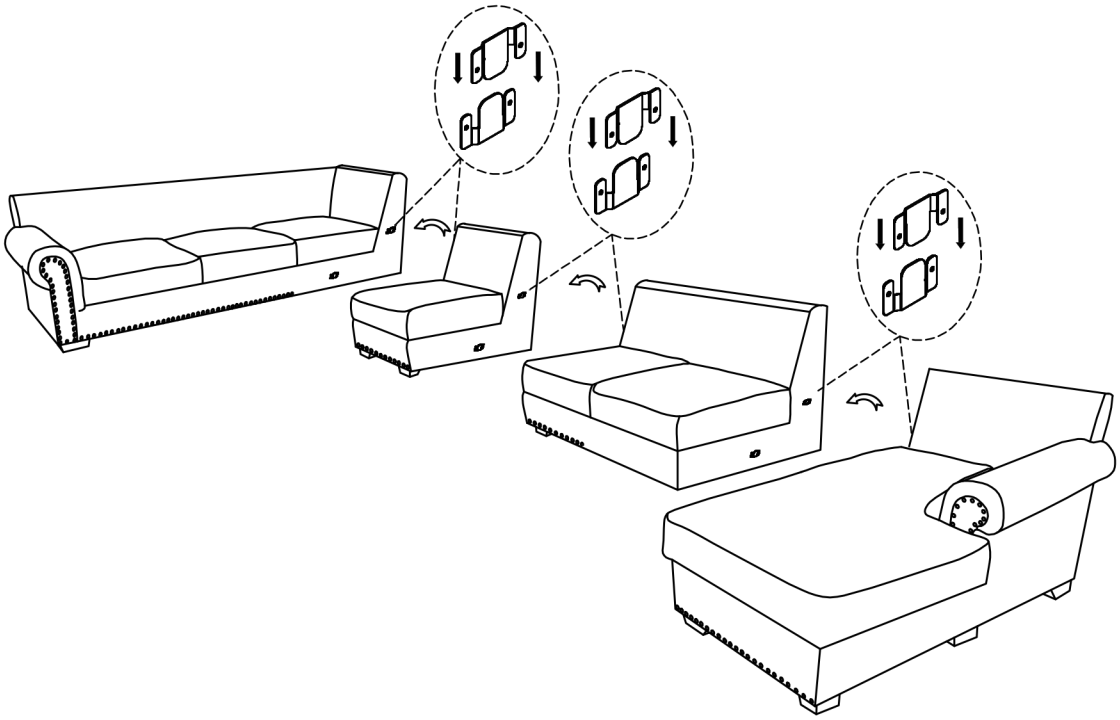

ASSEMBLY INSTRUCTIONS

11

Part #10 x11pcs

Part #11 x4pcs

Part #12 x4pcs

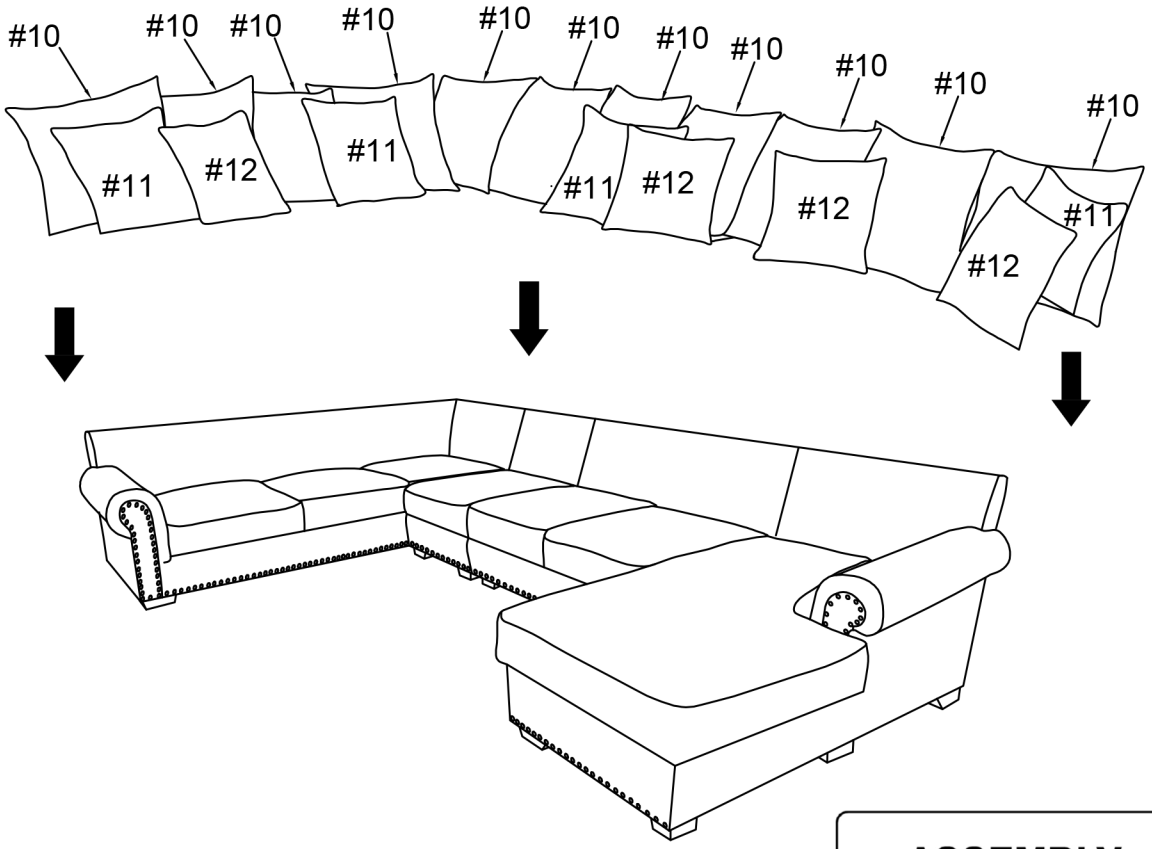

ASSEMBLY COMPLETED

Please ensure the furniture rests on an even and flat surface. If the product wobbles or feels loose, double-check all bolts and/or screws are properly tightened and secured.

Keep this handy!

Please retain this instruction manual and any order-related information for future reference.

Lift, don't drag!

To avoid damage to product please always LIFT the product when transporting of adjusting the placement.