MANHATTAN COMFORT

DR1674

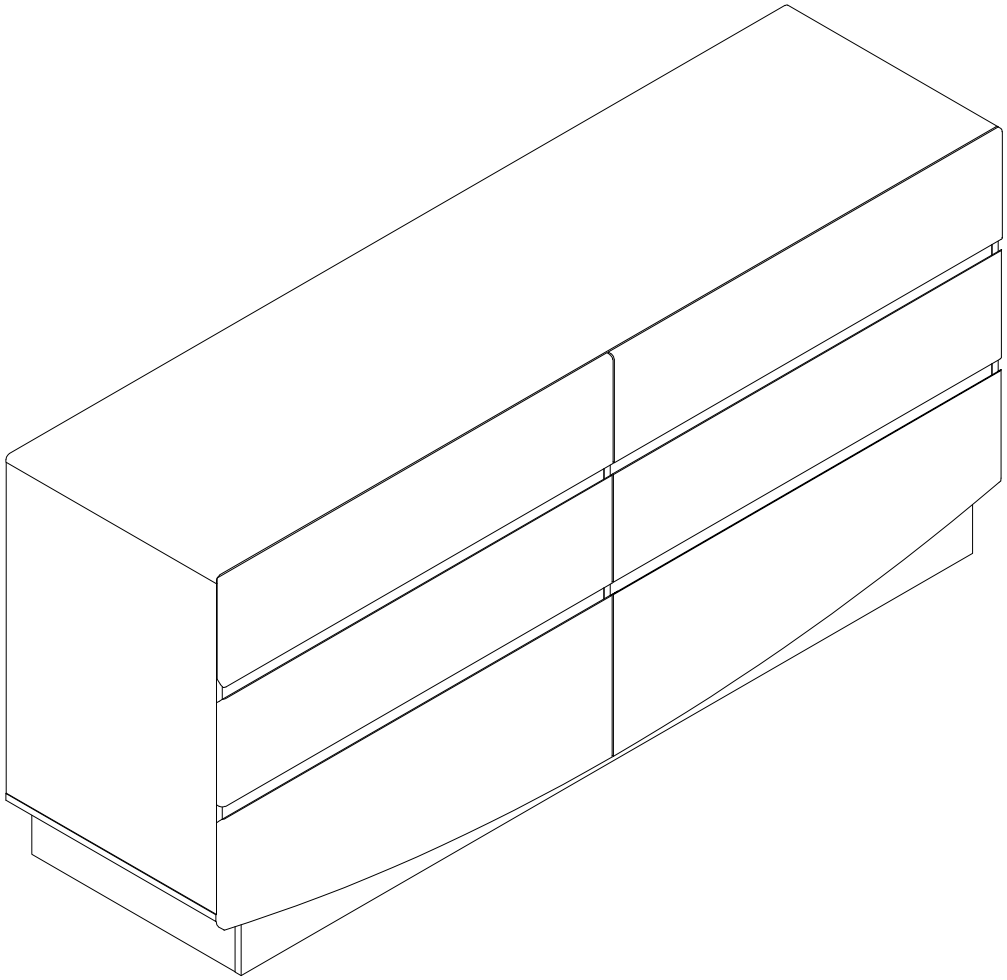

V.08082025

STOP!

Before beginning the assembly process,
ensure all boxes and parts have been delivered.

FOR BEST RESULTS:

- Do not throw away packaging materials until assembly is complete.
- Assemble item on a soft surface, such as cardboard or carpet, to protect finish.
- Proper assembly requires two people.

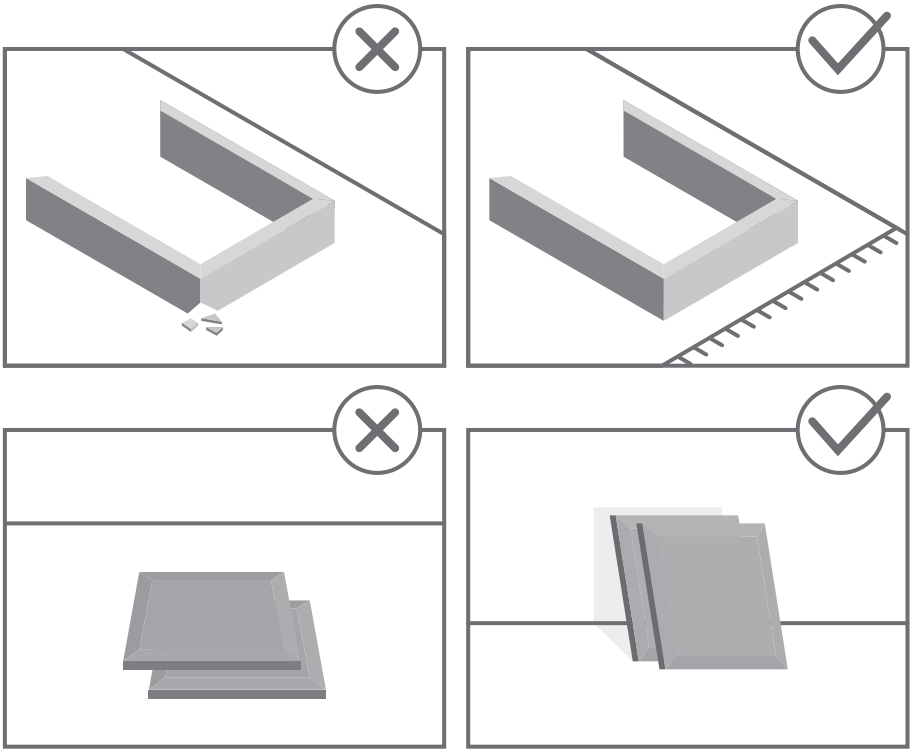

TOOLS REQUIRED

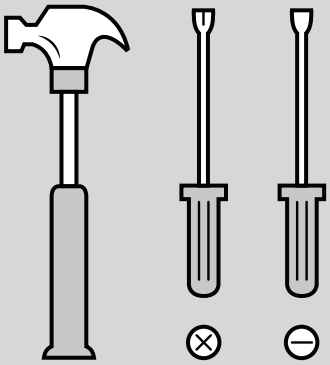

View our assembly video online:
WWW.MANHATTANCOMFORT.COM

Stuck? Question? We are here to help.
tel: 908-888-0818
e-mail: help@manhattancomfort.com

Support Site

Included in this package:

BOX 01/02

A. TOP PANEL(1)
B. BOTTOM PANEL(1)
C. LEFT PANEL (1)
D. RIGHT PANEL (1)
E. BACK UPPER PANEL (1)
F. FRONT HORIZONTAL PANEL (4)
G. BETWEEN PANEL (1)
H. DRAWER LEFT PANEL (6)
I. DRAWER RIGHT PANEL (6)
J. DRAWER BACK PANEL (6)
K. DRAWER BOTTOM PANEL (6)
L. DRAWER SUPPORT PANEL (12)
Y. METAL BAR(1)

BOX 02/02

M. FRONT FOOTBOARD PANEL (1)
N. BACK FOOTBOARD PANEL (1)
O. LEFT FOOTBOARD PANEL (1)
P. RIGHT FOOTBOARD PANEL (1)
Q. MIDDLE FOOTBOARD PANEL (1)
R. DRAWER LEFT FRONT UPPER PANEL (1)
S. DRAWER RIGHT FRONT UPPER PANEL (1)
T. DRAWER LEFT FRONT MIDDLE PANEL (1)
U. DRAWER RIGHT FRONT MIDDLE PANEL (1)
V. DRAWER LEFT FRONT LOWER PANEL (1)
W. DRAWER RIGHT FRONT LOWER PANEL (1)
X. BACK LOWER PANEL (1)

ALL HARDWARE ARE IN **BOX 01/02**

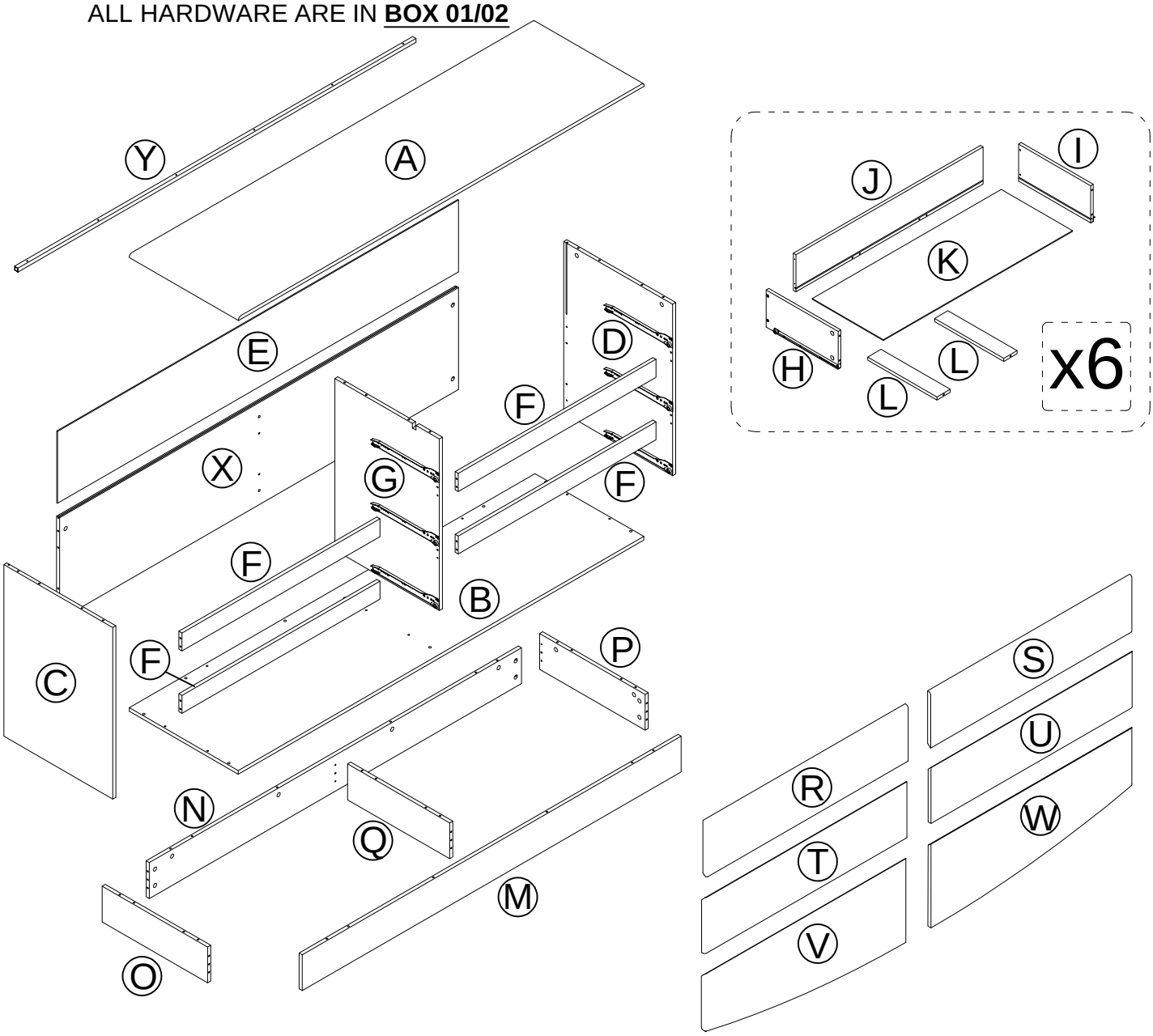

Hardware Identification

① KD BOLT - 80pcs
L=35mm

② KD LARGE CAM - 44pcs
Ø15*11mm

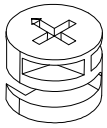

③ COVER CAP - 80pcs

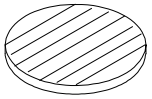

④ WOOD DOWEL-44pcs
Ø8*30mm

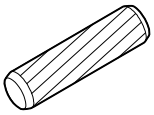

⑤ KD SMALL CAM - 36pcs
Ø15*9mm

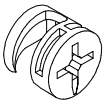

⑥ SCREW - 48pcs
Ø4*38mm

⑦ PLASTIC WEDGE - 10pcs

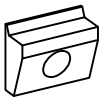

⑧ SCREW - 10pcs
Ø3*17mm

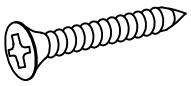

⑨ SCREW - 12pcs
Ø6*50mm

⑩ LOCK - 1pc

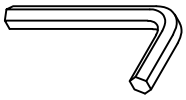

⑪ STRAPS - 2pcs

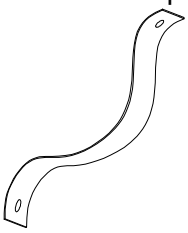

⑫ SCREW - 2pcs
Ø4*18mm

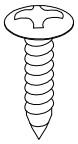

⑬ SCREW - 2pcs
Ø4*25mm

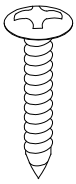

⑭ PLASTIC - 2pcs

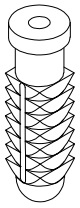

⑮ SCREW - 6pcs
Ø4*25mm

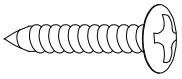

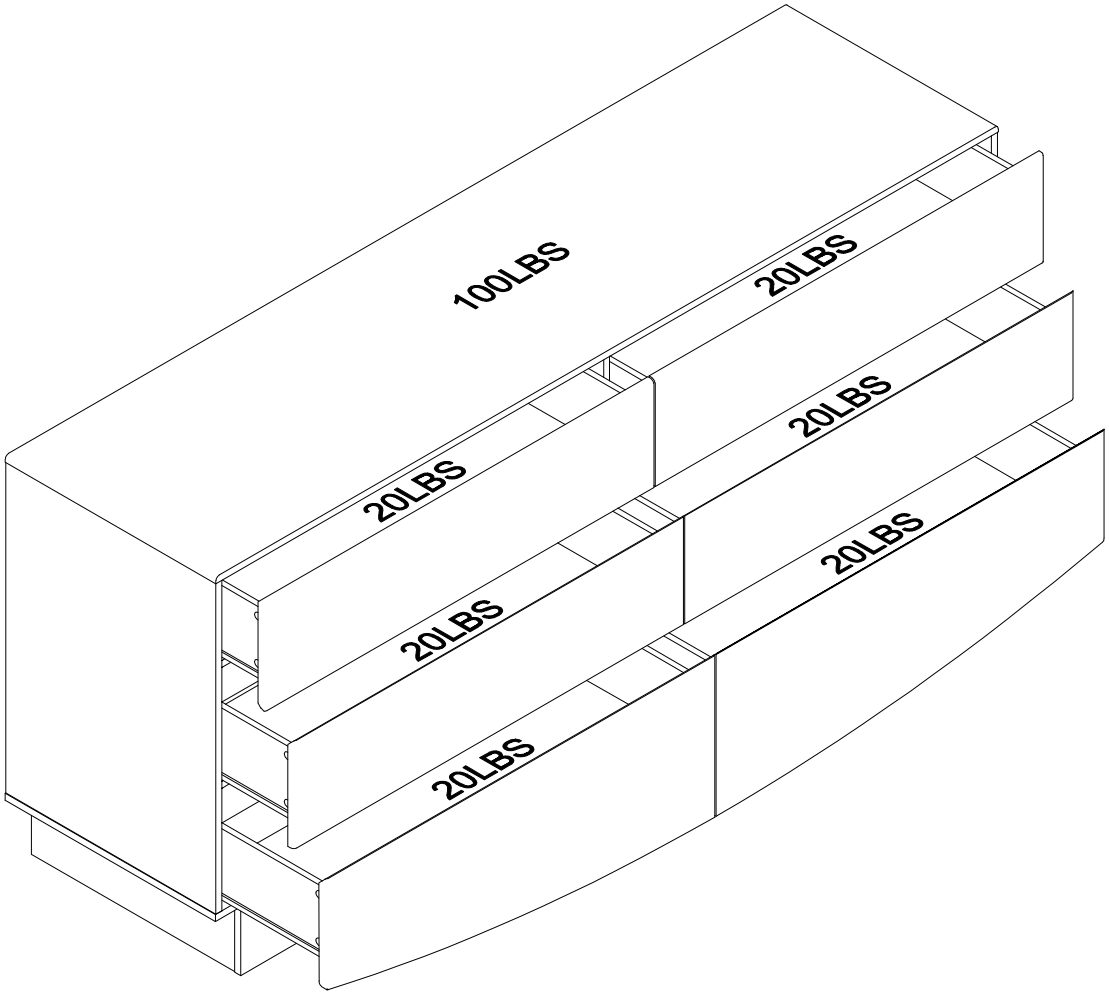
100LBS
20LBS
20LBS
20LBS
20LBS
20LBS

Step 1:

***** Insert Twenty-eight KD BOLT (1) to the TOP PANEL (A), BOTTOM PANEL(B), LEFT PANEL (C) and RIGHT PANEL(D).
* Assemble the METAL BAR(Y) to the TOP PANEL (A) with the SCREW (15) .

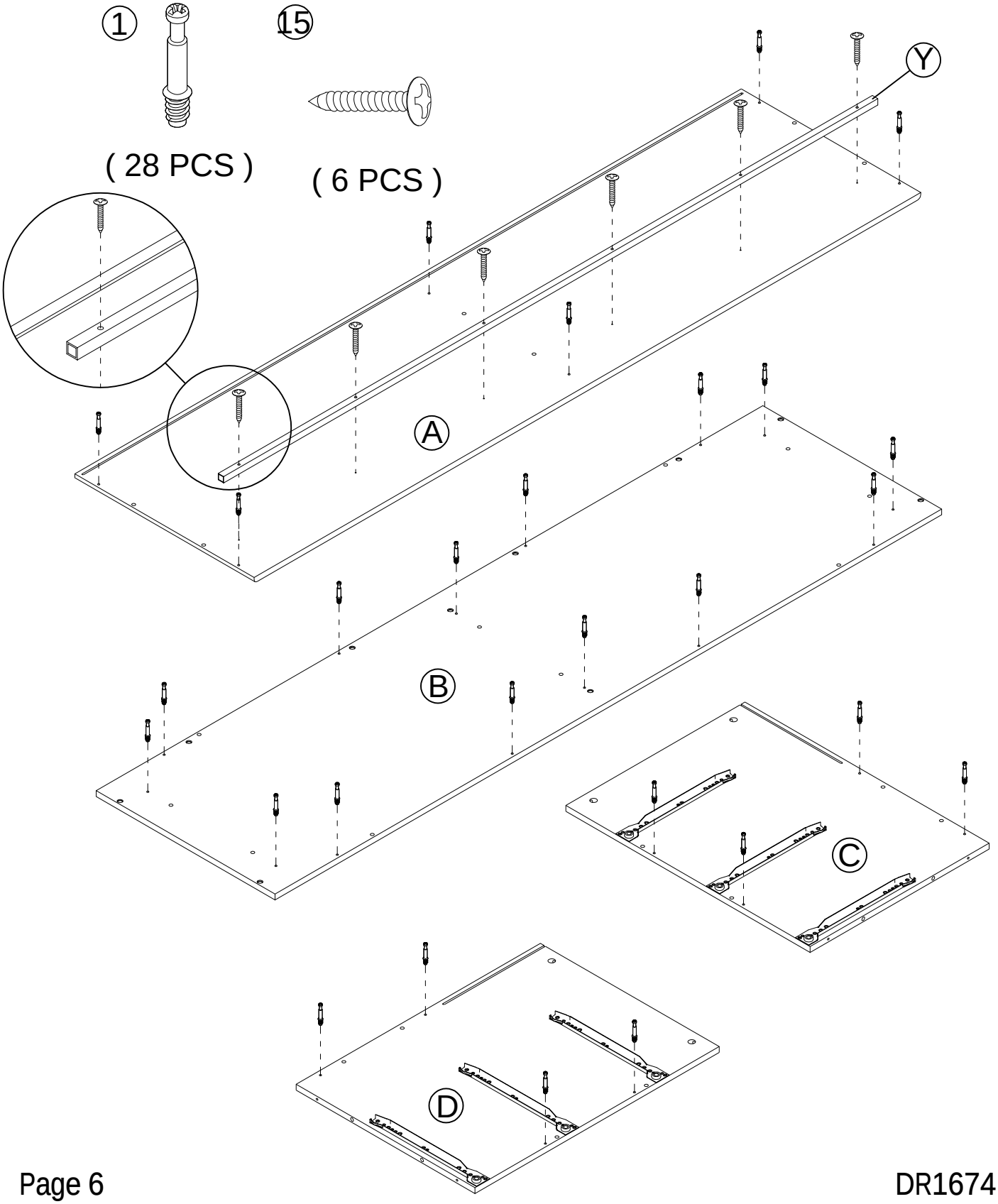

Step 2:

***** Insert Sixteen KD BOLT (1) to the BETWEEN PANEL(G), FRONT FOOTBOARD PANEL (M), BACK FOOTBOARD PANEL (N), LEFT FOOTBOARD PANEL (O) and RIGHT FOOTBOARD PANEL (P).

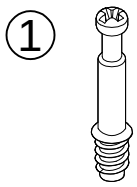

(16 PCS)

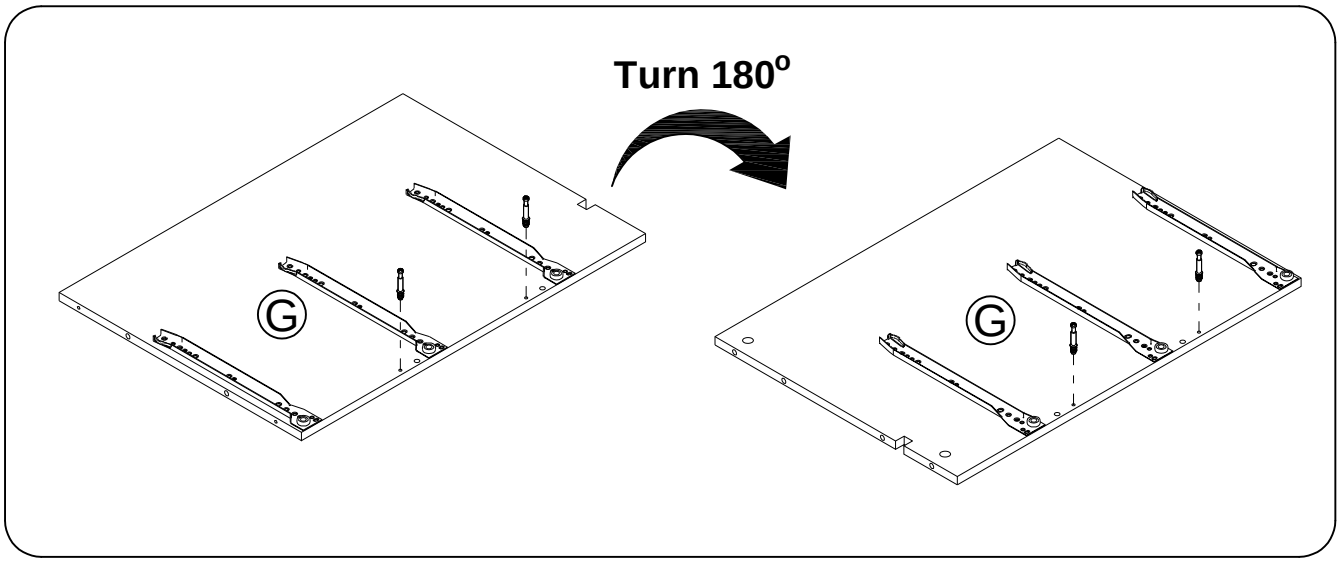

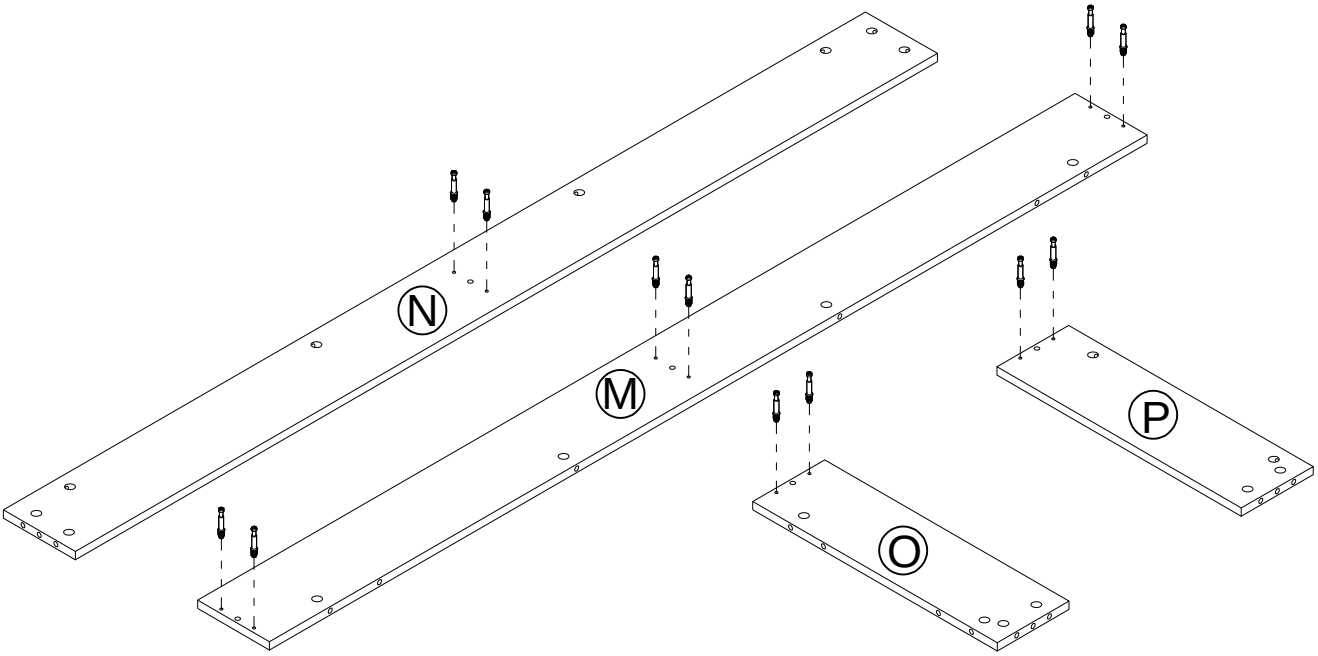

Step 3:

***** Attach the BETWEEN PANEL(G) to the BACK LOWER PANEL(X) by the Two Screw(9), Two WOOD DOWEL (4) and LOCK(10).

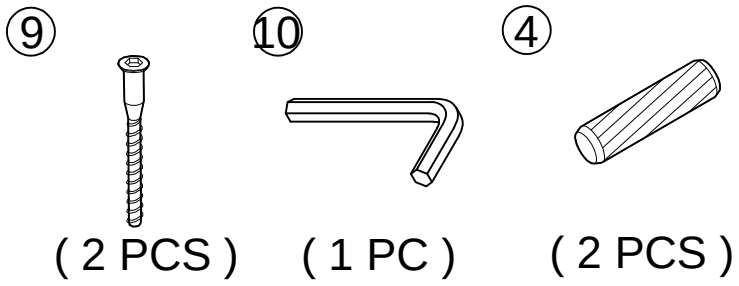

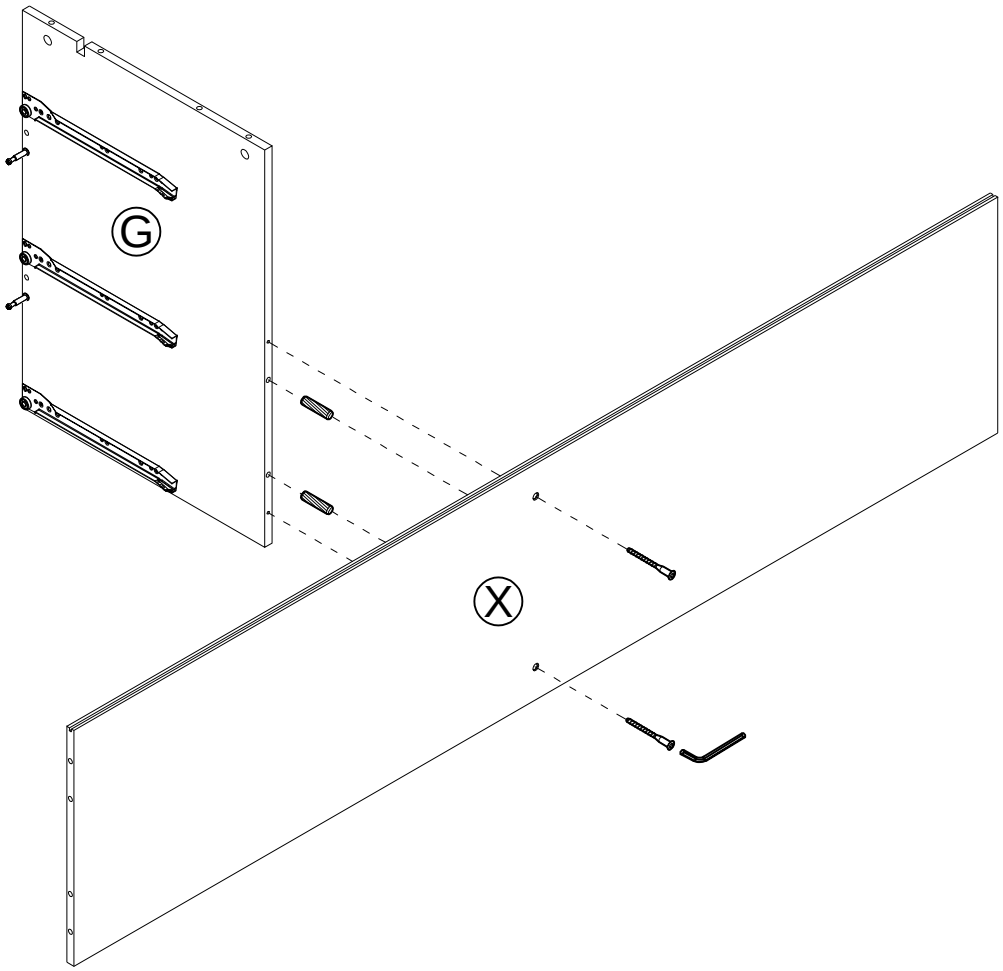

Step 4:

***** Attach the Four FRONT HORIZONTAL PANEL (F) to the BETWEEN PANEL(G) by the Four KD LARGE CAM (2) , Four COVER CAP (3) and Four WOOD DOWEL (4) .

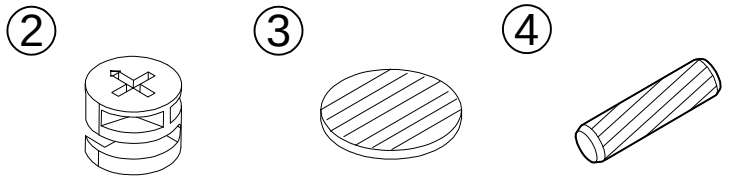

(4 PCS) (4 PCS) (4 PCS)

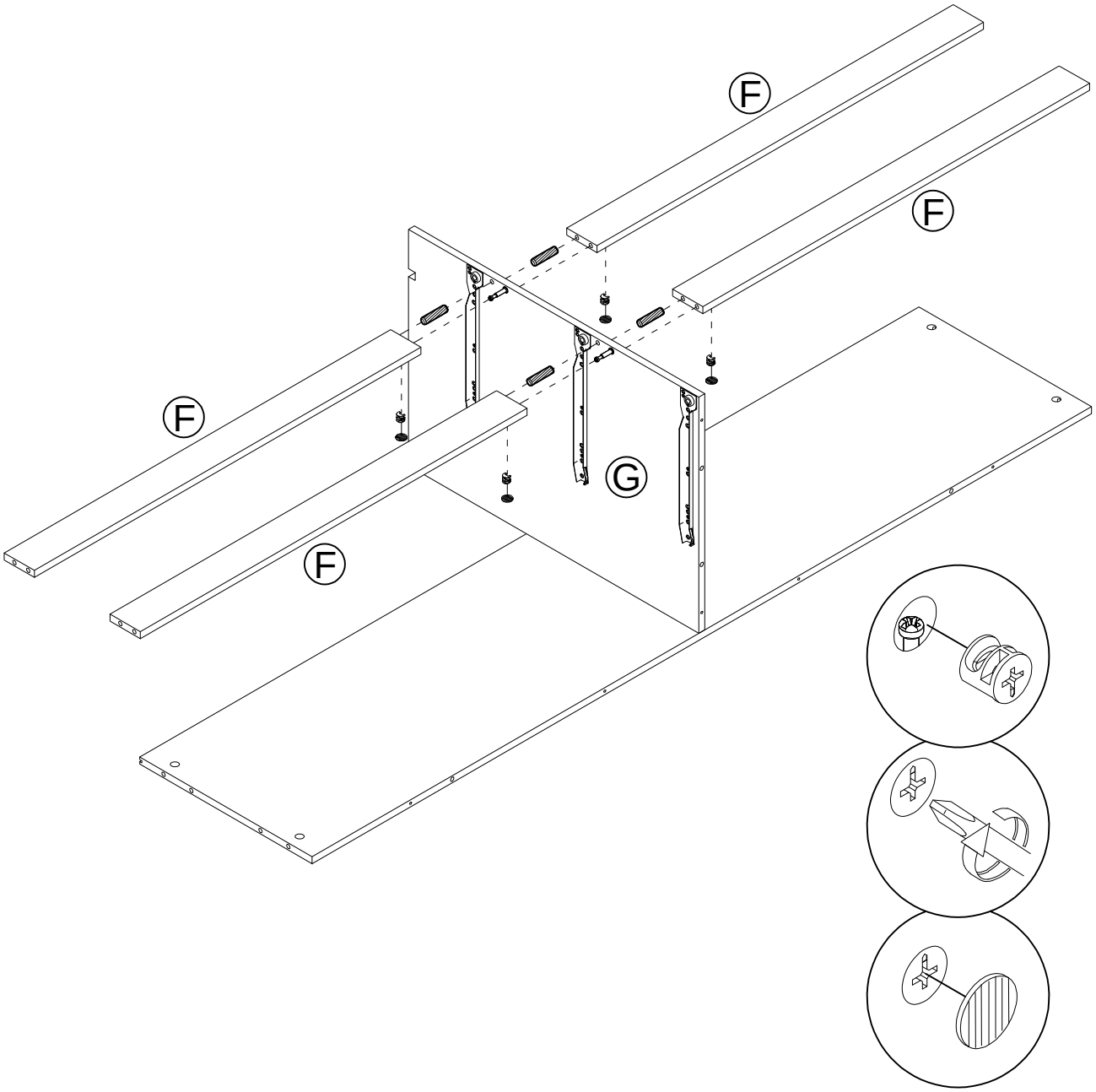

Step 5:

***** Attach the LEFT PANEL (C) and RIGHT PANEL(D) to the Four FRONT HORIZONTAL PANEL (F) and BACK LOWER PANEL(X) by the Eight KD LARGE CAM (2) , Eight COVER CAP (3) and Eight WOOD DOWEL (4) .

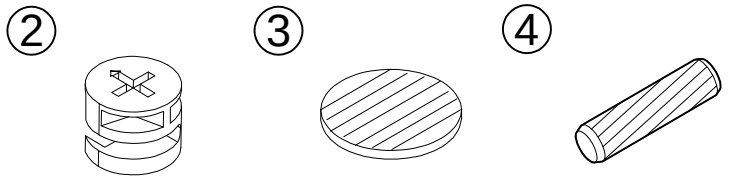

(8 PCS) (8 PCS) (8 PCS)

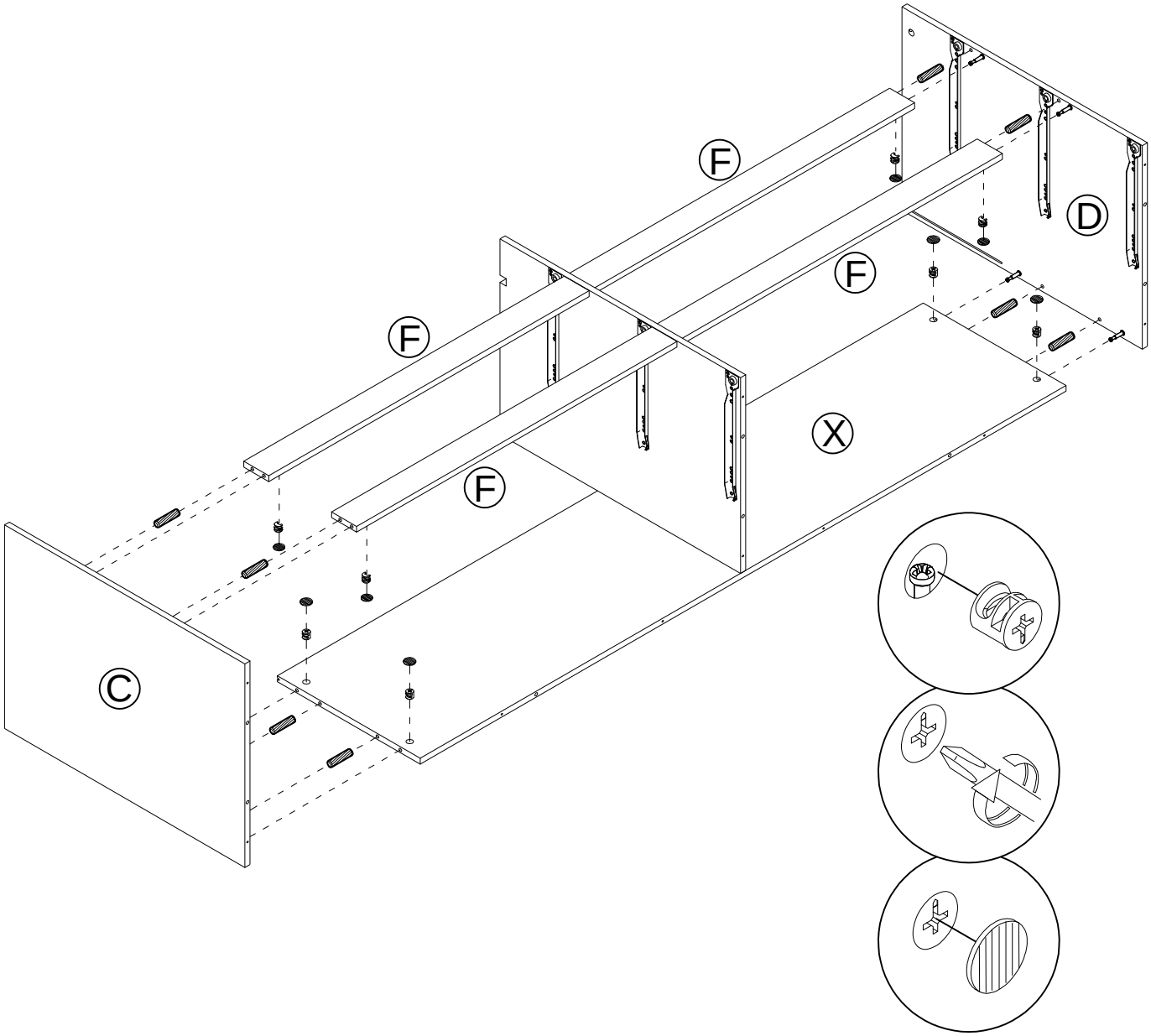

Step 6:

***** Attach the BOTTOM PANEL(B) to the BACK LOWER PANEL (X), BETWEEN PANEL(G), LEFT PANEL (C) and RIGHT PANEL(D) by the Ten Screw(9), Eight WOOD DOWEL (4) and LOCK(10).

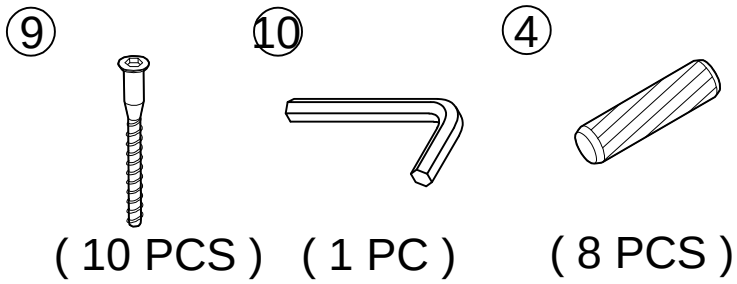

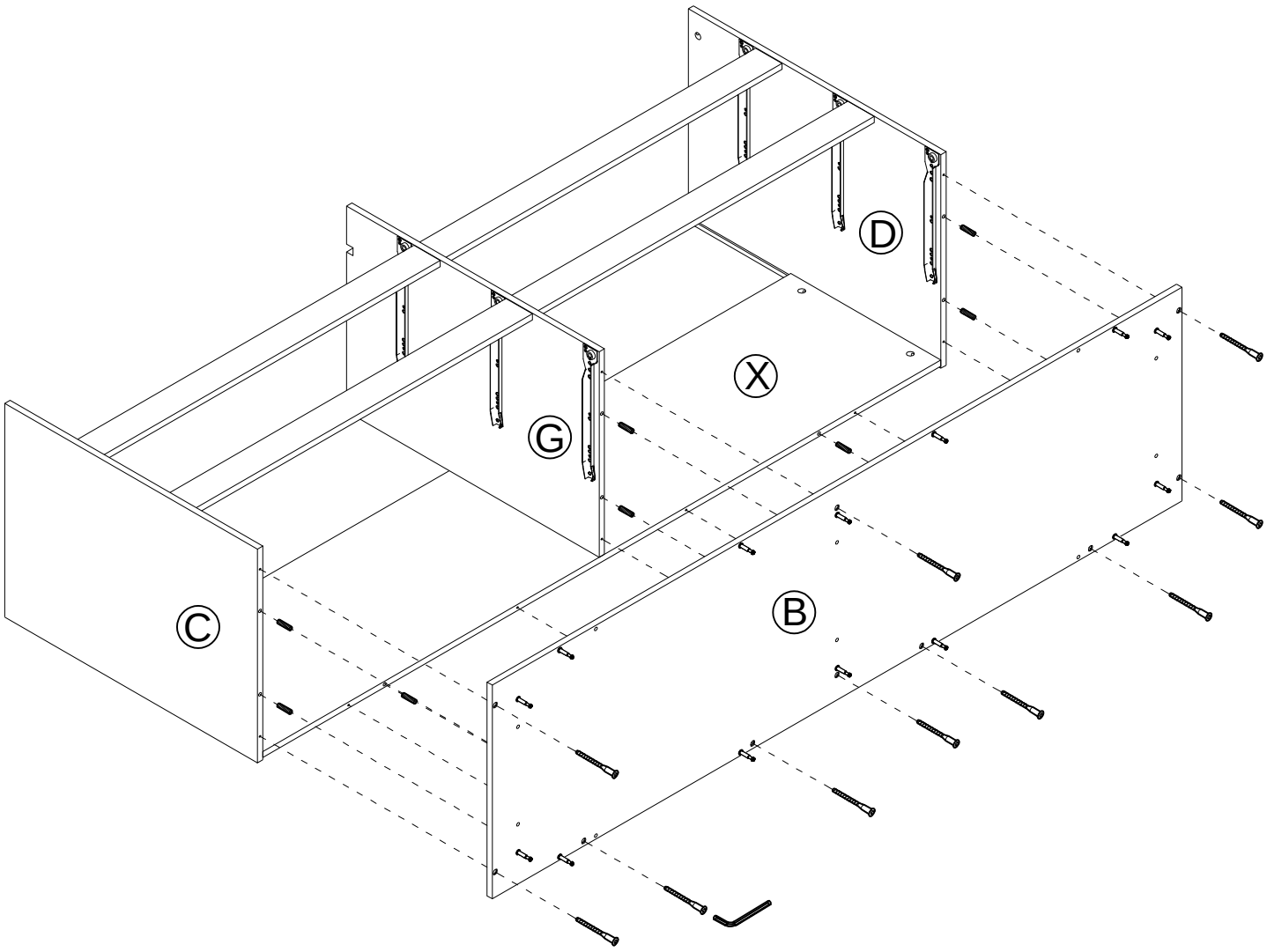

Step 7:

***** Attach the LEFT FOOTBOARD PANEL (O), MIDDLE FOOTBOARD PANEL (Q) and RIGHT FOOTBOARD PANEL (P) to the BACK FOOTBOARD PANEL (N) by the Six KD LARGE CAM (2) , Six COVER CAP (3) and Three WOOD DOWEL (4) .

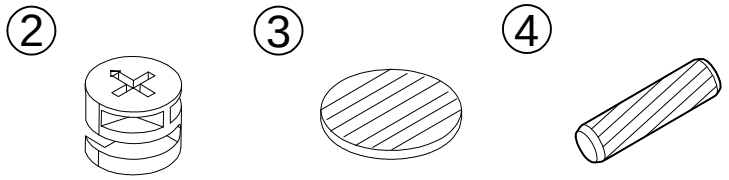

(6 PCS) (6 PCS) (3 PCS)

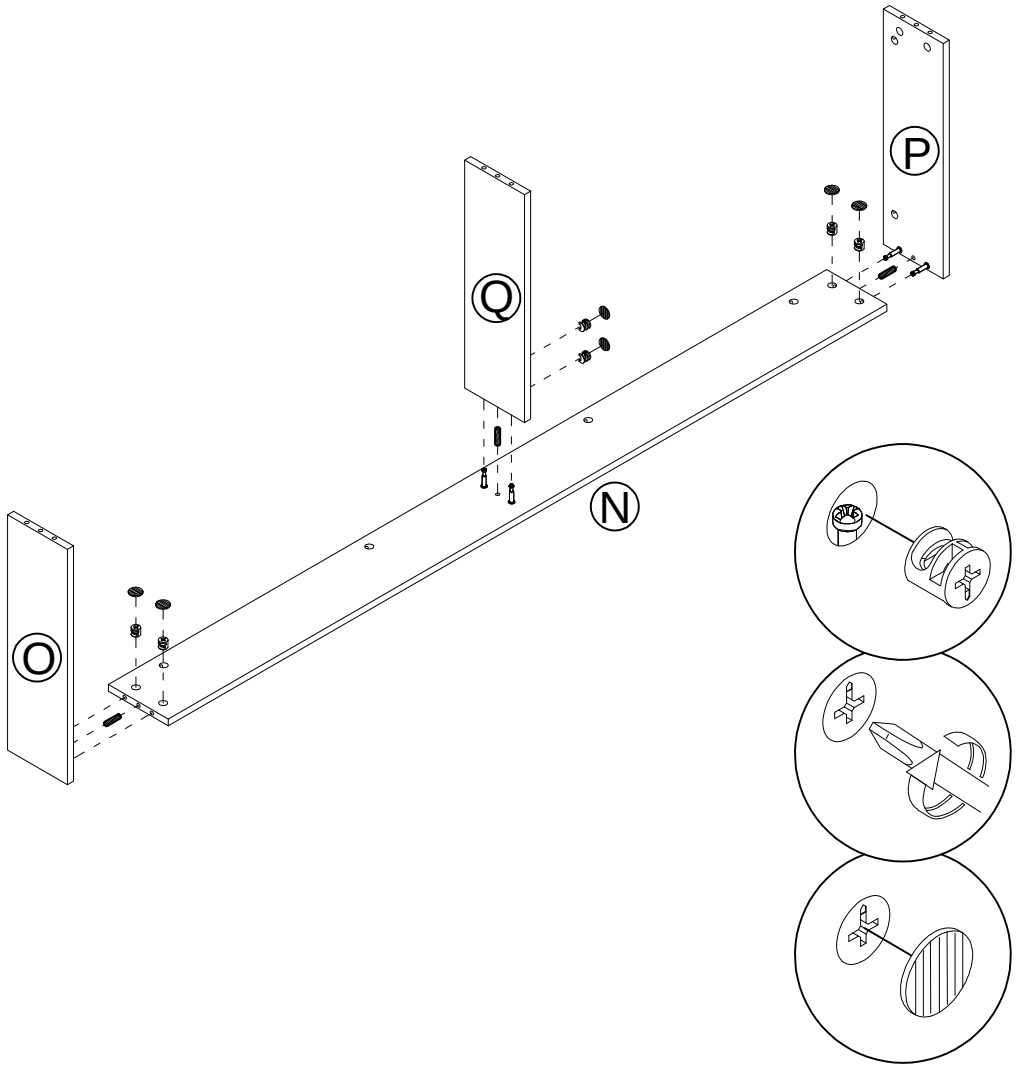

Step 8:

***** Attach the LEFT FOOTBOARD PANEL (O), MIDDLE FOOTBOARD PANEL (Q) and RIGHT FOOTBOARD PANEL (P) to the FRONT FOOTBOARD PANEL (M) by the Six KD LARGE CAM (2) , Six COVER CAP (3) and Three WOOD DOWEL (4) .

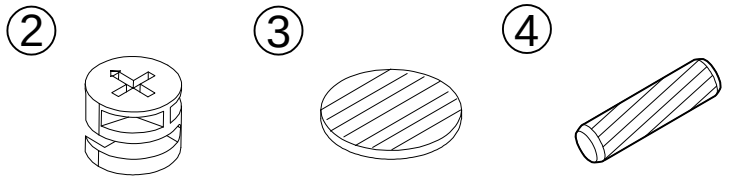

(6 PCS) (6 PCS) (3 PCS)

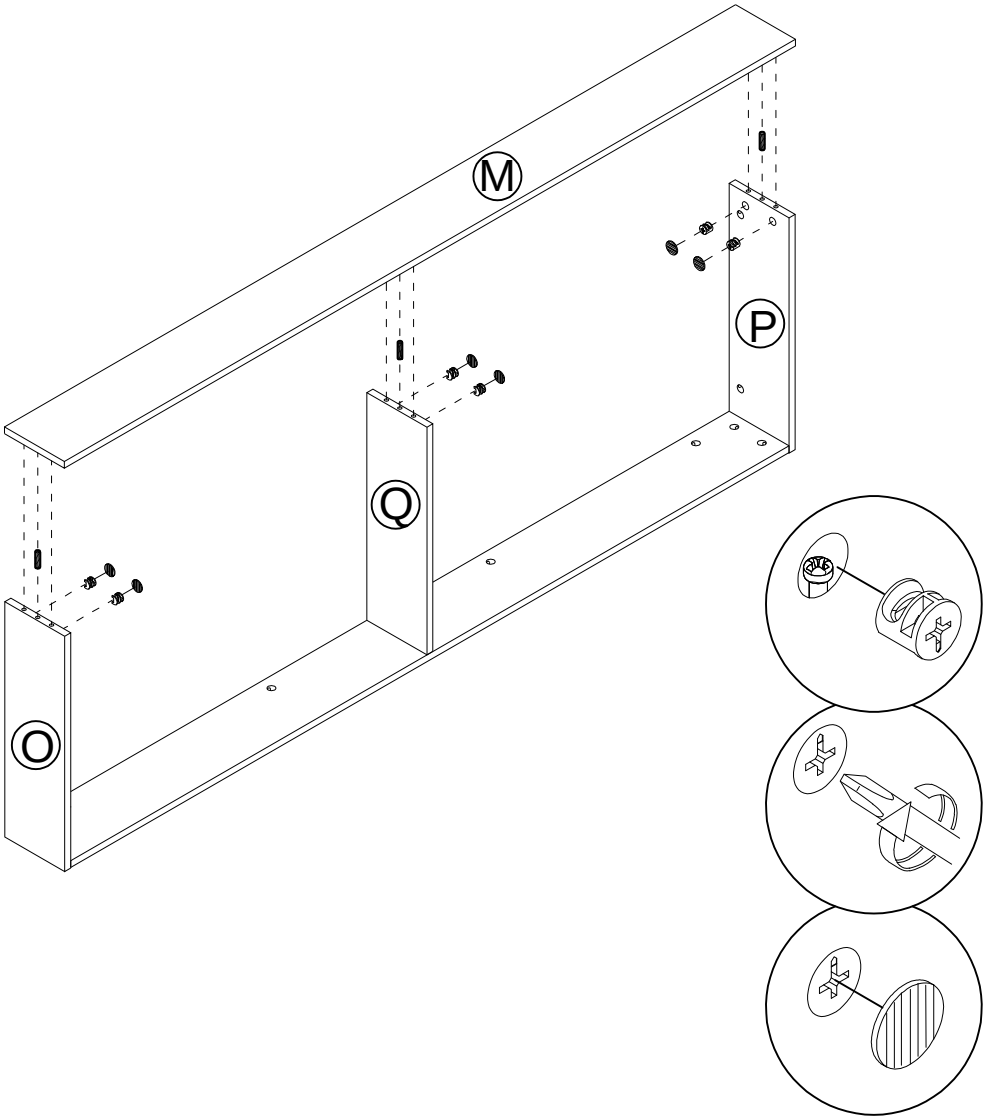

Step 9:

***** Attach the LEFT FOOTBOARD PANEL (O), MIDDLE FOOTBOARD PANEL (Q) and RIGHT FOOTBOARD PANEL (P), FRONT FOOTBOARD PANEL (M) and BACK FOOTBOARD PANEL (N) to the BOTTOM PANEL(B) by the Fourteen KD LARGE CAM (2) , Fourteen COVER CAP (3) and Ten WOOD DOWEL (4) .

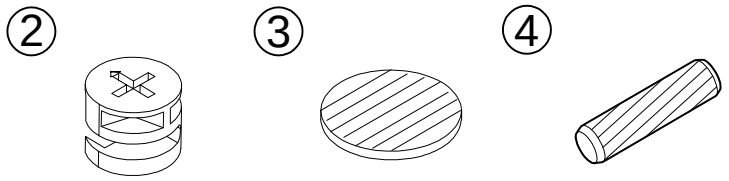

(14 PCS) (14 PCS) (10 PCS)

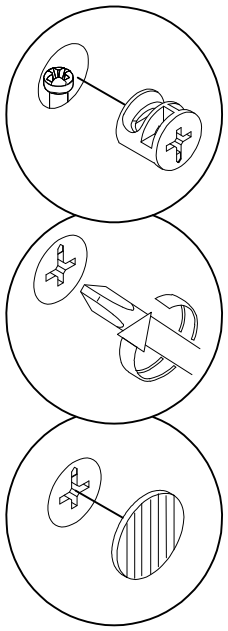

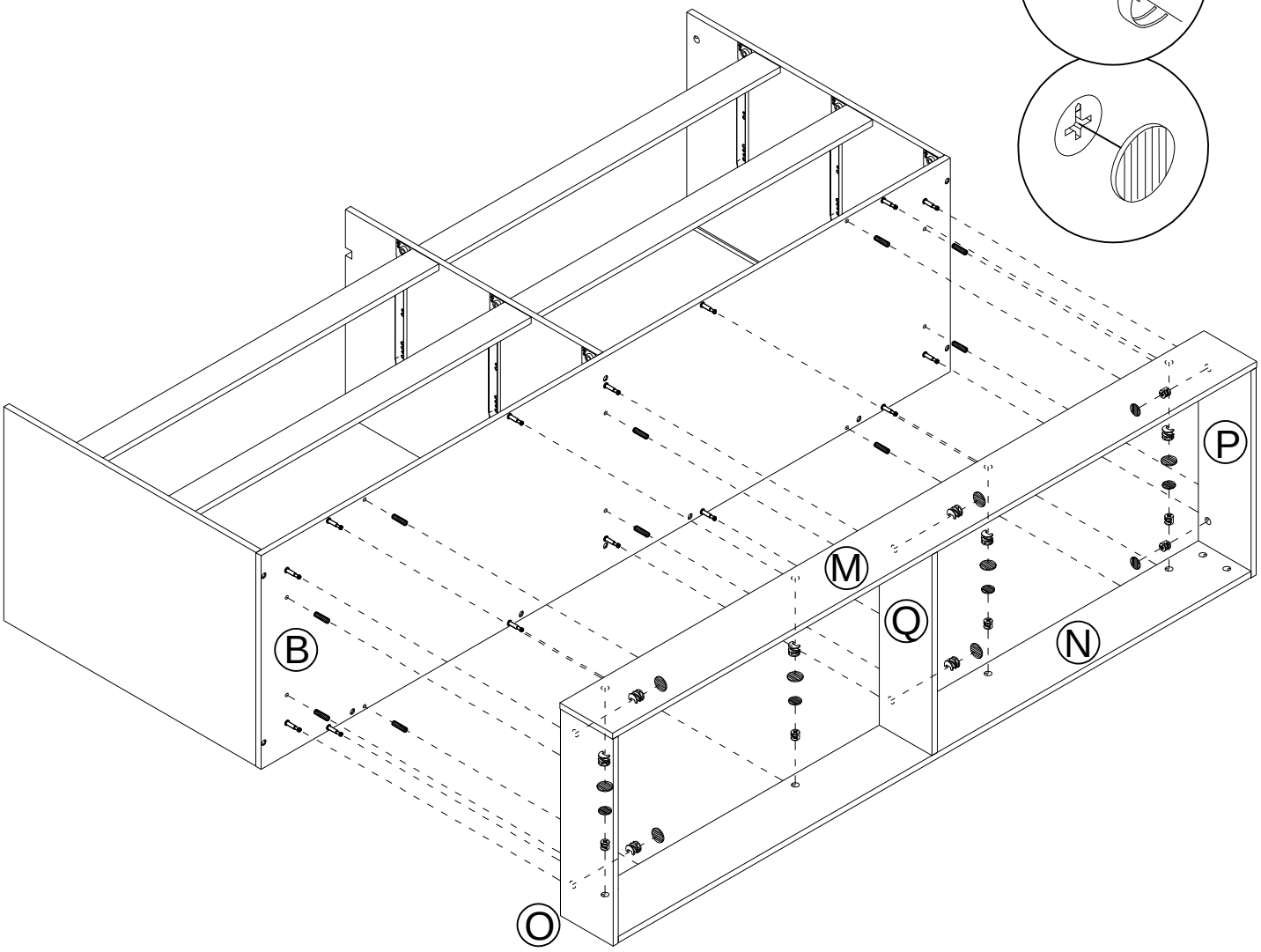

Step 10:

***** Insert the BACK UPPER PANEL (E) to the stand.

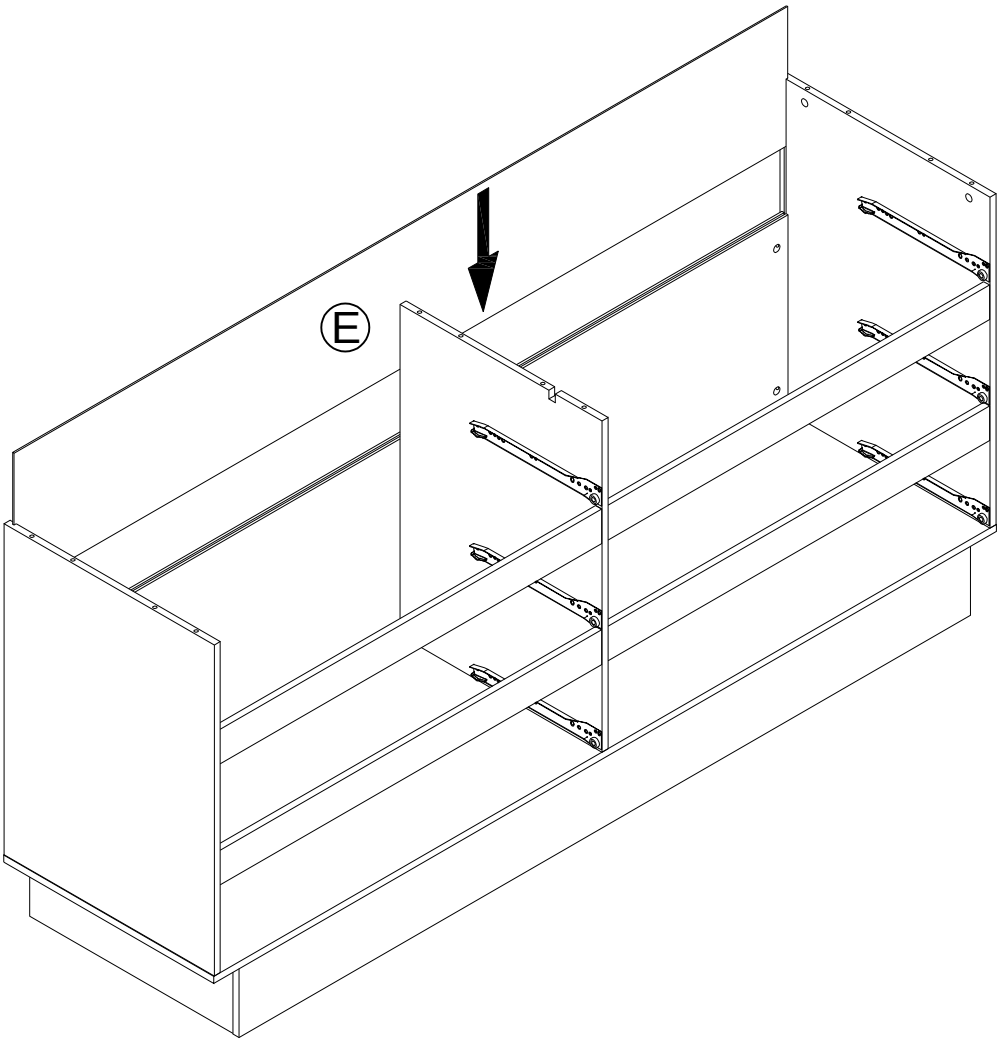

Step 11:

***** Attach the TOP PANEL(A) to the LEFT PANEL(C), BETWEEN PANEL(G) and RIGHT PANEL(D) by the Six KD LARGE CAM (2) , Six COVER CAP (3) and Six WOOD DOWEL (4) .

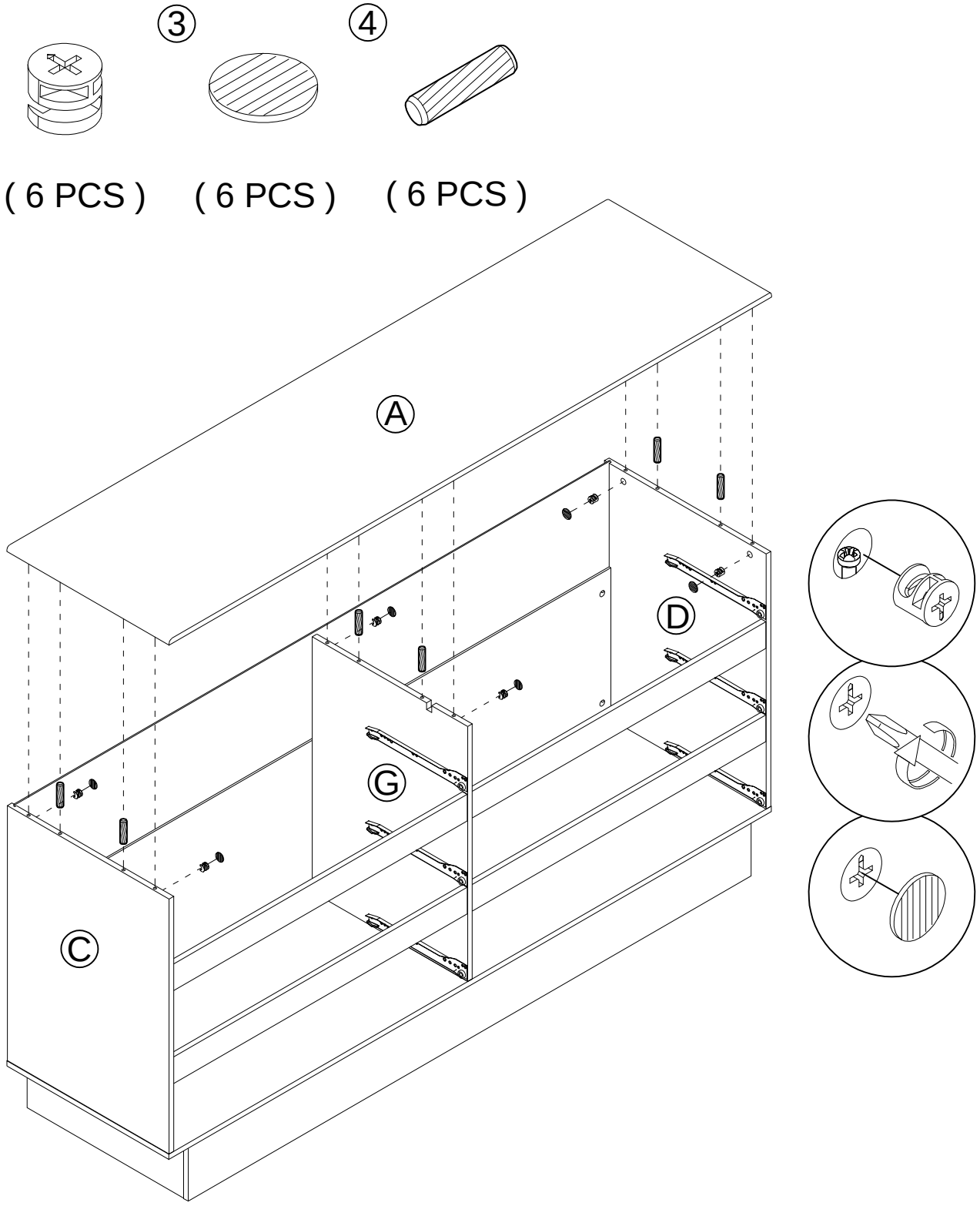

Step 12:

***** Insert Ten PLASTIC WEDGE(7) and Ten SCREW(8) to the BACK UPPER PANEL (E).

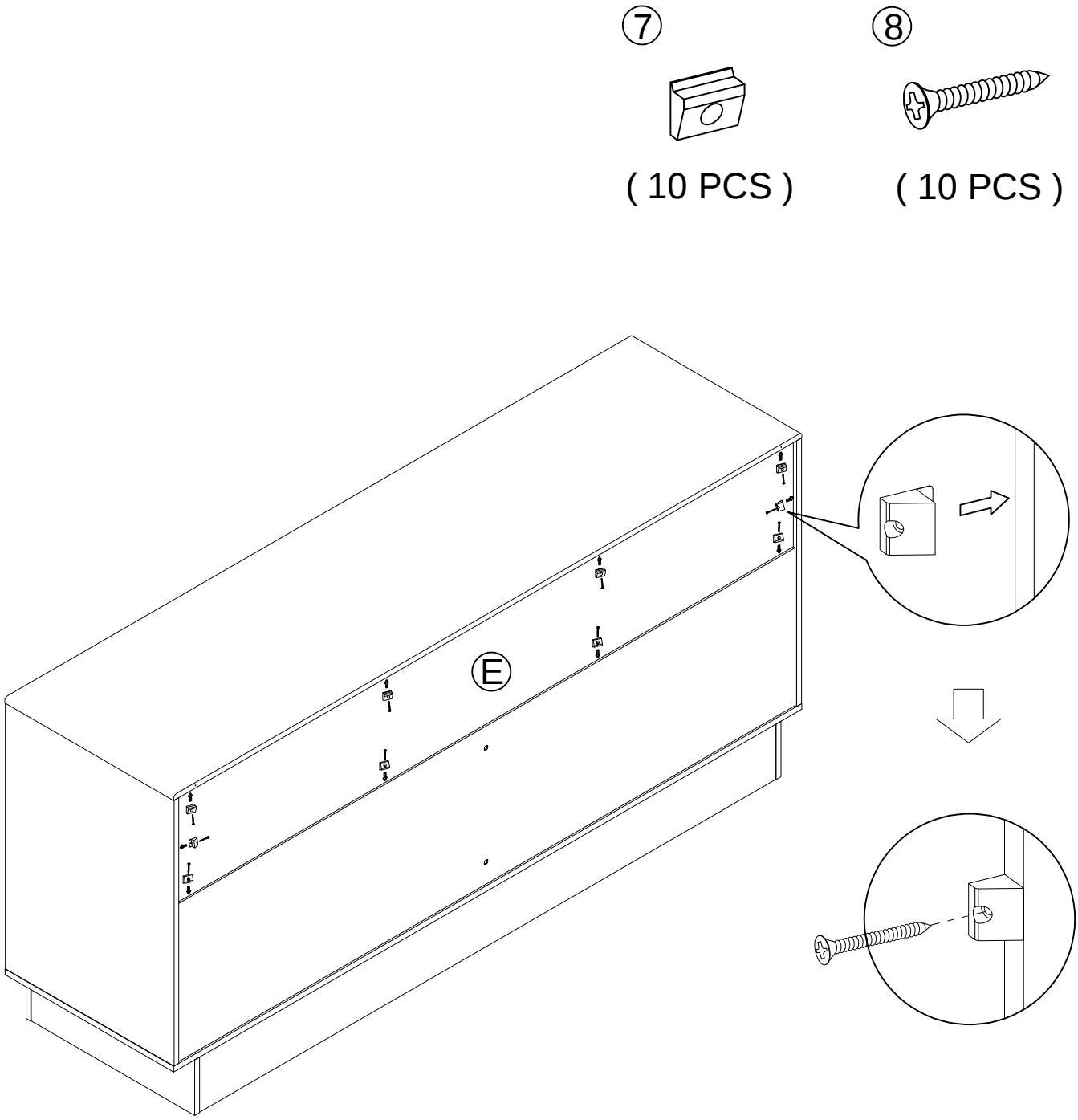

Step 13:

***** Assemble the DRAWER BACK PANEL(J) to the DRAWER LEFT PANEL (H) and DRAWER RIGHT PANEL (I) by the SCREW (6) .

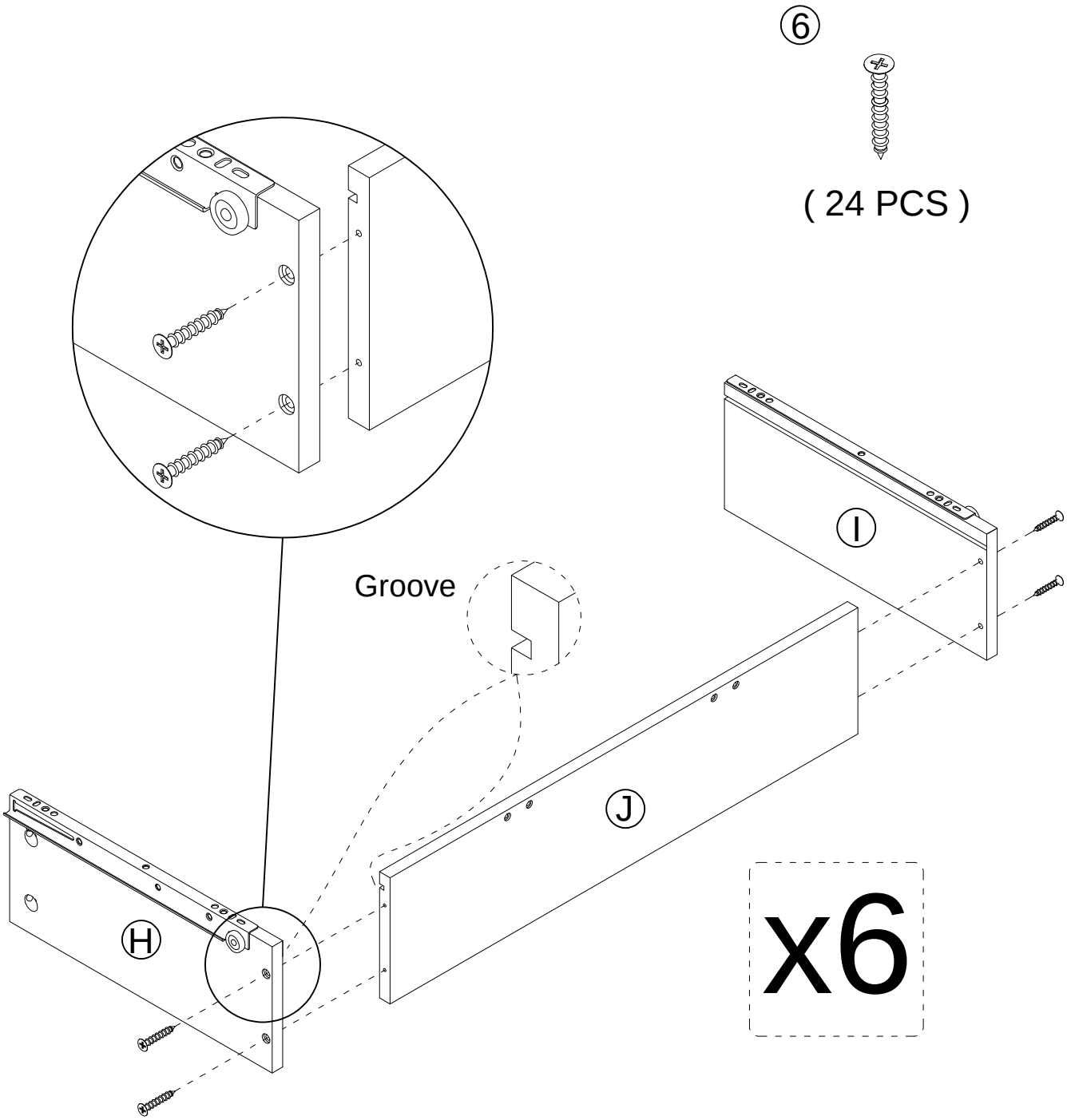

Step 14:

* Slide in the DRAWER BOTTOM PANEL (K).
* Assemble the Two DRAWER SUPPORT PANEL (L) to the DRAWER TRAY by the SCREW (6) .

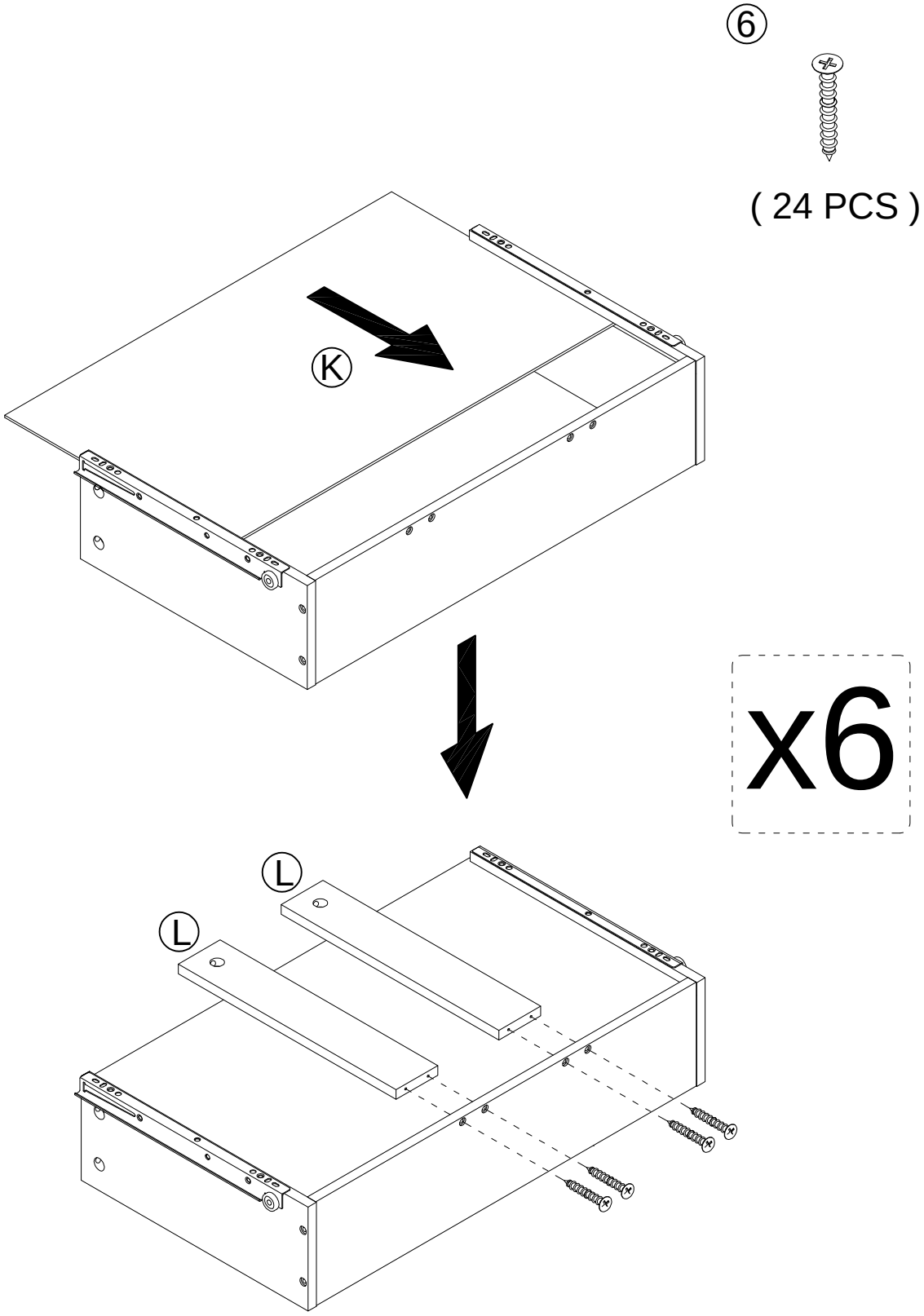

Step 15:

* Insert Thirty-six KD BOLT (1) to the DRAWER LEFT FRONT UPPER PANEL (R), DRAWER RIGHT FRONT UPPER PANEL (S), DRAWER LEFT FRONT MIDDLE PANEL (T), DRAWER RIGHT FRONT MIDDLE PANEL (U), DRAWER LEFT FRONT LOWER PANEL (V), DRAWER RIGHT FRONT LOWER PANEL (W).

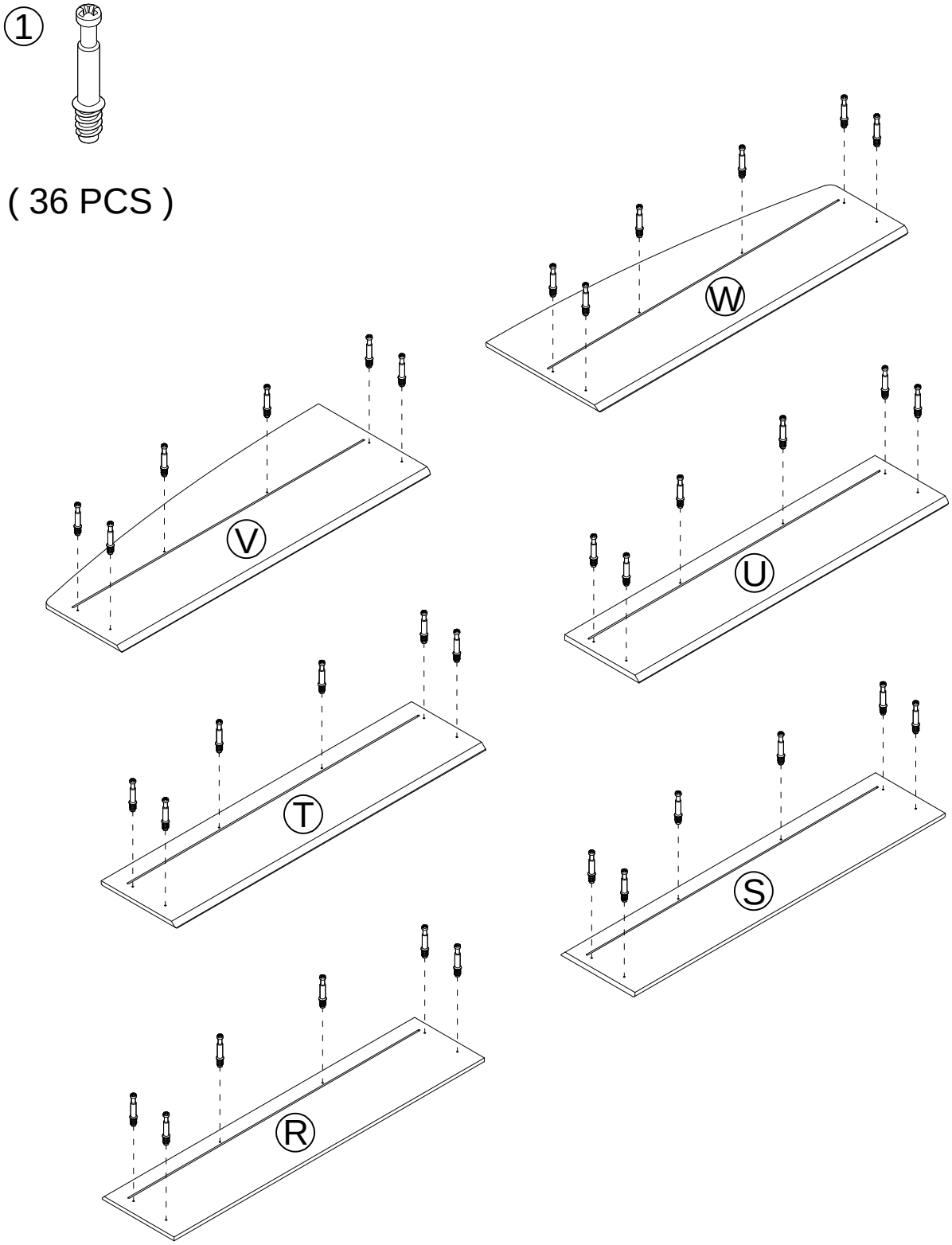

Step 16:

***** Assemble the DRAWER LEFT FRONT UPPER PANEL (R), DRAWER RIGHT FRONT UPPER PANEL (S), DRAWER LEFT FRONT MIDDLE PANEL (T), DRAWER RIGHT FRONT MIDDLE PANEL (U), DRAWER LEFT FRONT LOWER PANEL (V), DRAWER RIGHT FRONT LOWER PANEL (W) to the DRAWER TRAY by the Thirty-six KD SMALL CAM (5) and Thirty-six COVER CAP (3).

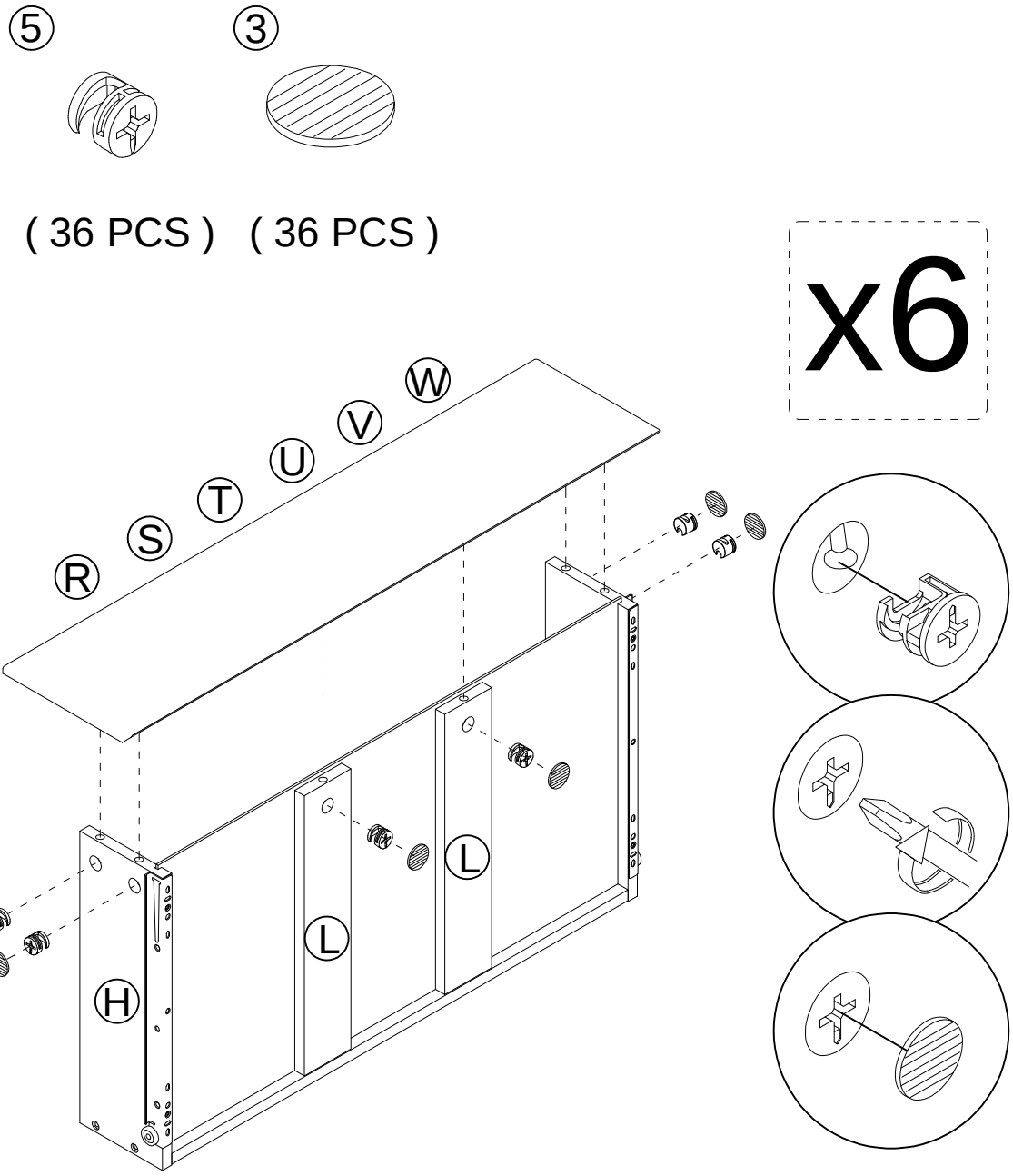

Step 17:

*Input Six Drawer tray to the stand.

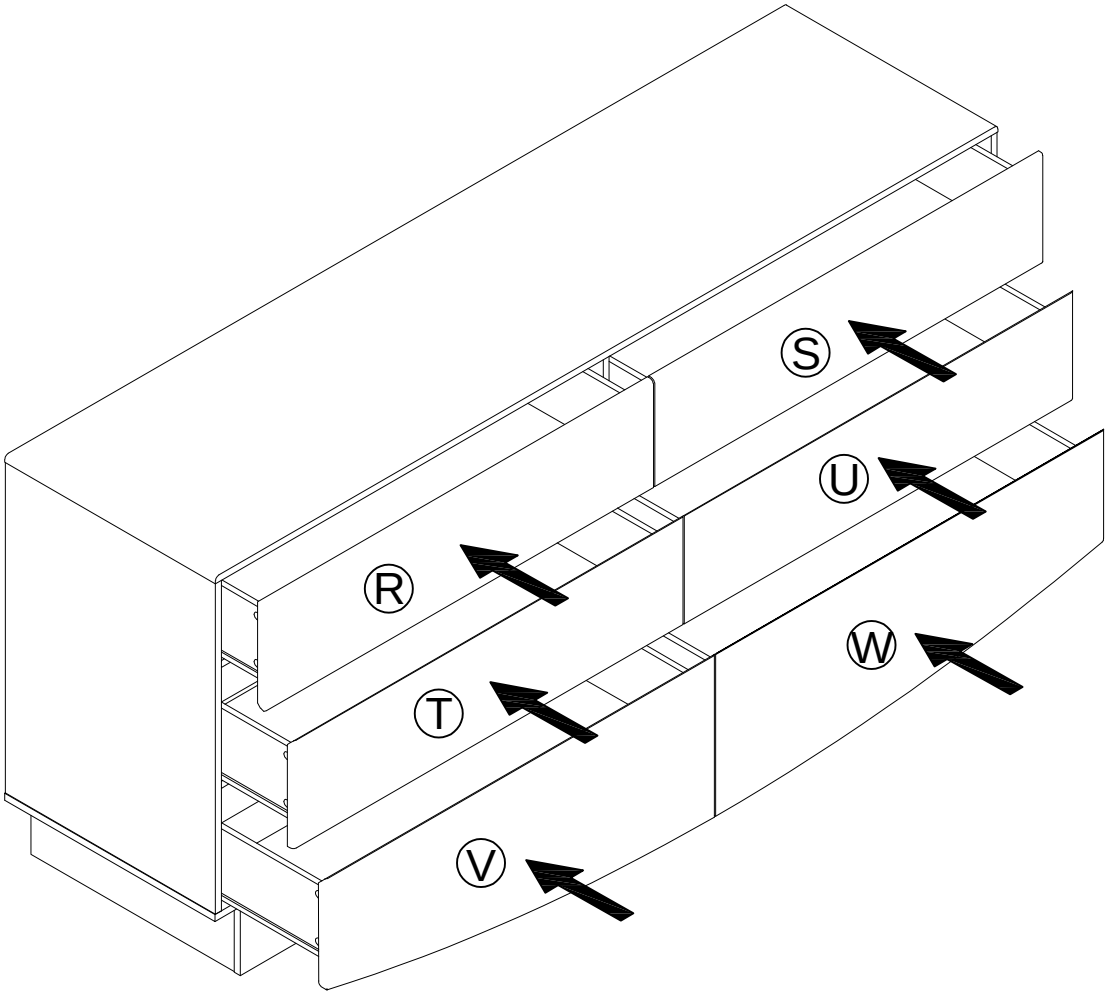

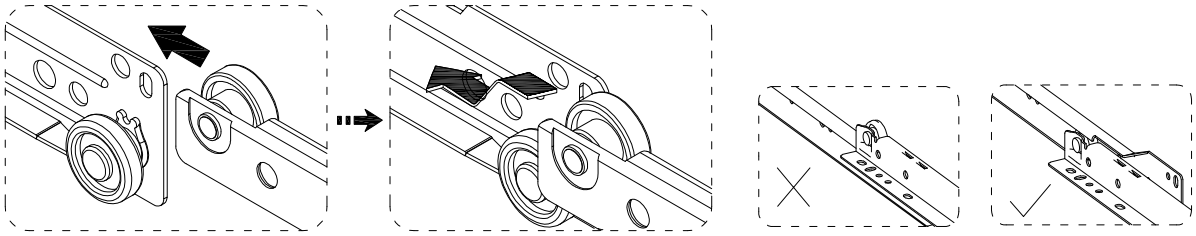

Step 18:

***** Attach anti-tipping straps to the back of the stand.

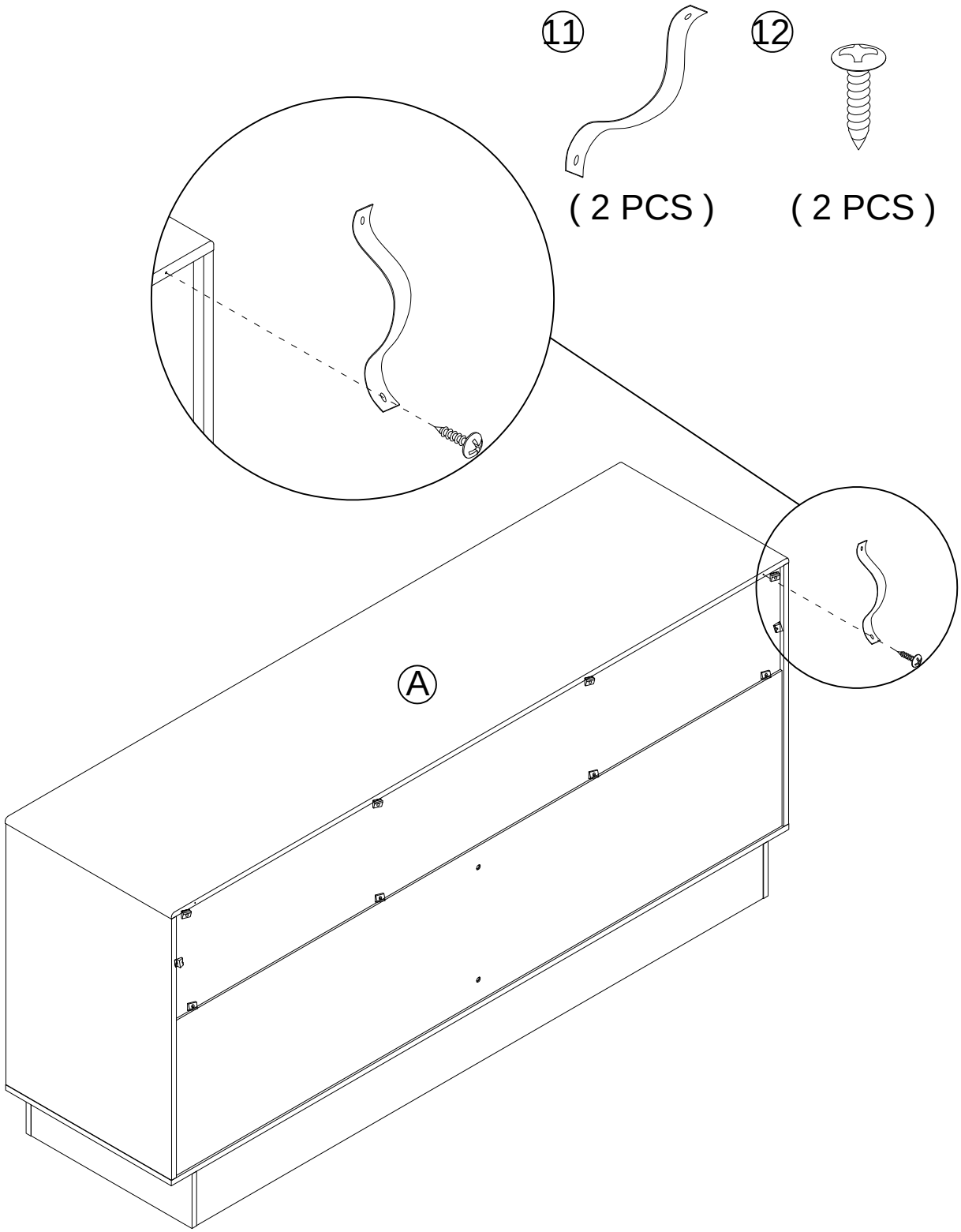

Step 19:

1st- With your pencil, strike a mark through the center of the hole in the SAFETY STRAP.

2nd- Drill a 3/8" hole on the mark.

3rd- FURNITURE TIPPING RESTRAINT KIT (14) into the hole until it is even with the surface of the wall.

4th- Turn the LONG SCREW through the hole in the SAFETY STRAP and into the WALL ANCHOR.

NOTE: You will need to turn the LONG SCREW multiple turns to completely tighten and secure your unit.

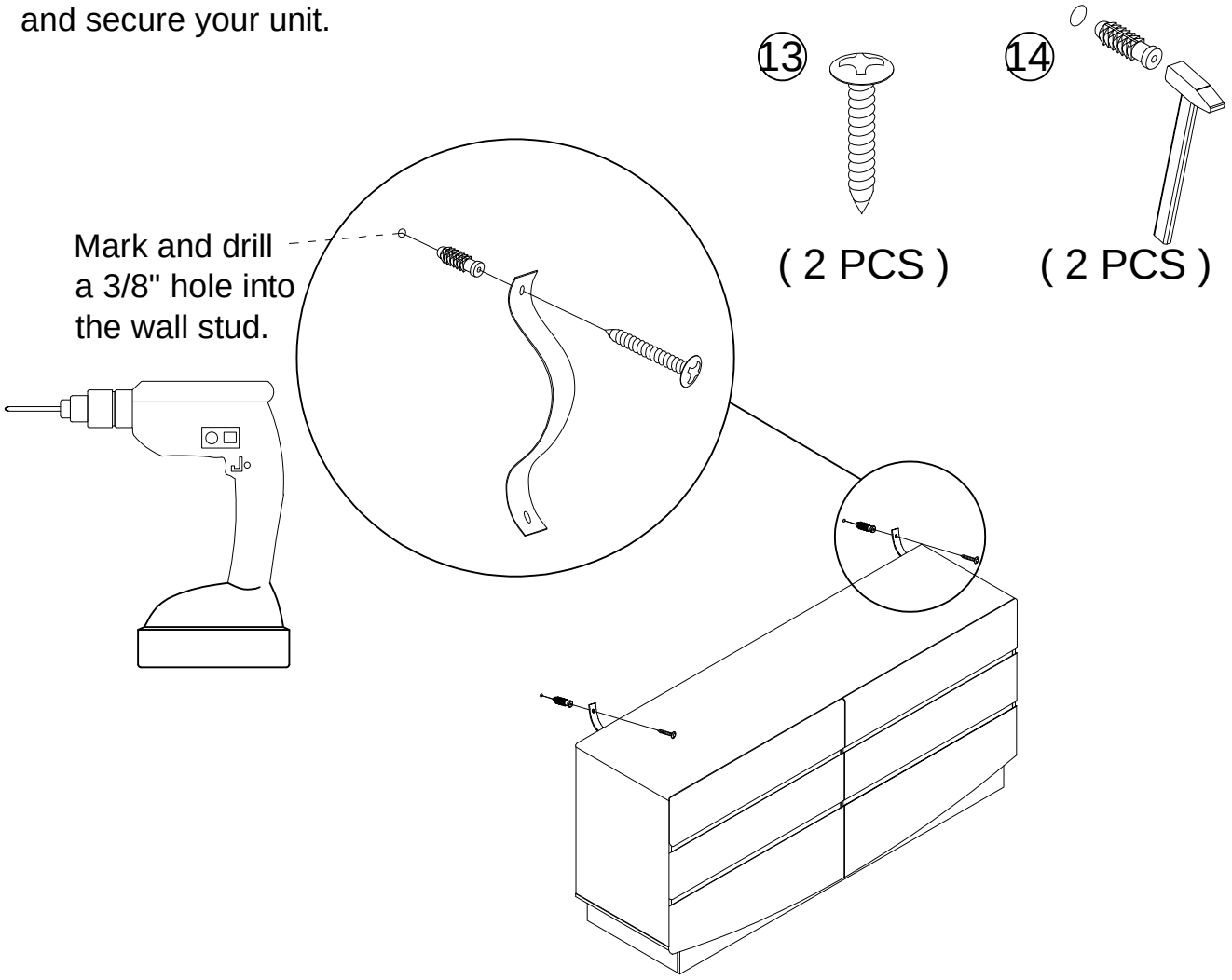

MANHATTAN COMFORT

WARRANTY POLICY

All Manhattan Comfort furniture products are warranted, to the original purchaser at the time of purchase and for a period of 30 days thereafter.
Our warranty is limited to new products purchased in factory sealed cartons. This warranty is valid in the United States of America and Canada.
In order to provide you with timely assistance, please thoroughly inspect your furniture for missing or defective parts immediately after opening the carton.
Manhattan Comfort offers a 30-day parts replacement warranty on all items.
Our furniture products are not intended for outdoor use.

THE WARRANTY DOES NOT COVER:

- Defects/damages by improper assembly or disassembly.
- Defects/damages caused by shipping. Claims for damage during transit should be placed immediately to the transportation company.
- Defects/damages caused by inappropriate use of the furniture.

319 Ridge Rd. Dayton, NJ 08810
908-888-0818