ASSEMBLY INSTRUCTION FOR ACME FURNITURE

MODEL#AC01031/AC01032

Thank you for purchasing the quality product.Be sure to check all packing material carefully for small parts which may have come loose inside the carton during shipment.Separate, identify and count all parts and metal hardware.Compare with all parts list to be sure all parts are present.if any part(s) are missing or damaged, please contact your local furniture dealer.For efficient and speedy service, please indicate the model number and code letter of part(s) needed.

Do not fully tighten screws until fully assembled

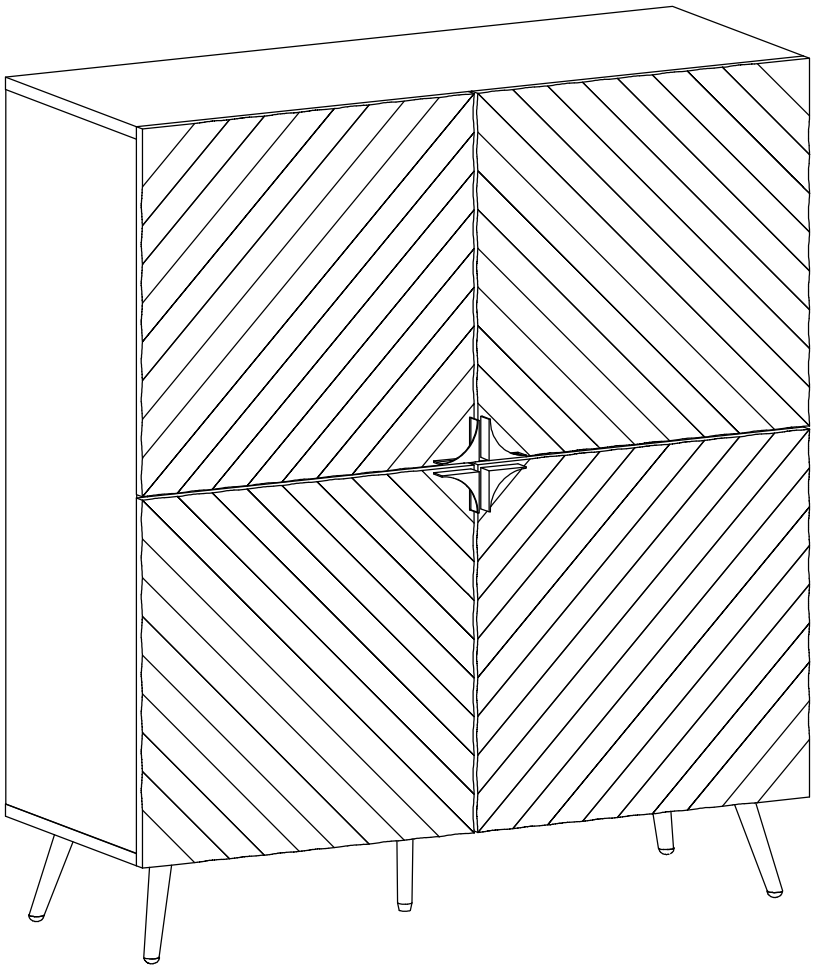

Attention:

***Some number parts listed on the instruction sheet may not be in parts bag as they may already be assembled. Carefully check parts and packing materials prior to ordering replacements.

General Assembly Guidelines

I. Ensure that all parts and hardware are available before beginning assembly.

II. Follow each step carefully to ensure the proper assembly of this product.

III. Two people are recommended for ease in the assembly of this product.

IV. The three main types of hardware used to assemble this product are: wood dowels, screws and bolts.

V. The provided glue is to secure wood dowels in place. When first inserting dowels, locate the appropriate hole for the dowel, place a small amount of glue in the hole and insert the dowel. Wipe away excess glue immediately.

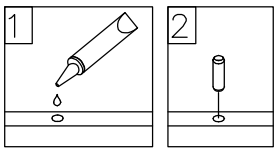

In future assembly steps when dowels are necessary to attach assembly parts together, place a small amount of glue on the end of the dowel before attaching parts together. Wipe away excess glue immediately.

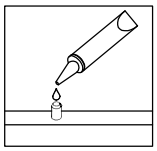

VI. A Phillips head screwdriver is required for the assembly of this product.

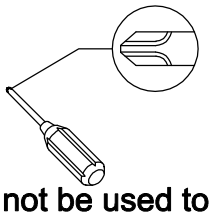

VII. Power tools should not be used to assemble this product.

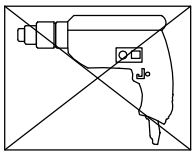

VIII. Concealed hinges are three-way adjustable.

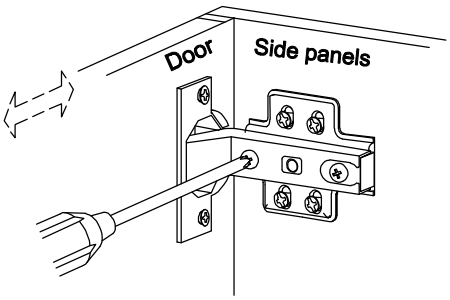

Horizontal
by screw adjustment

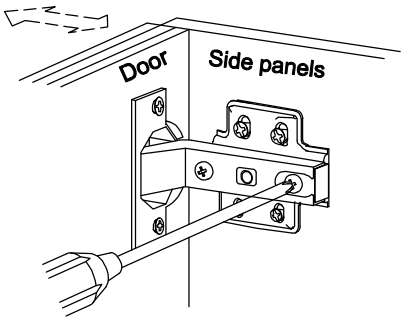

In-and-Out
by loosening the hinge-arm mounting screw or via cam adjustment

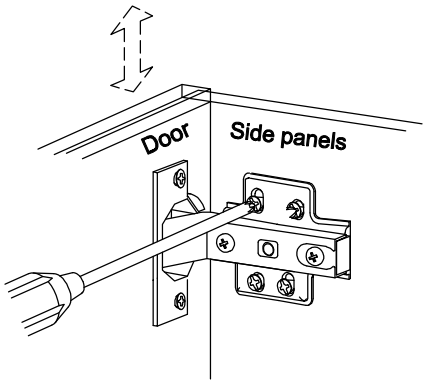

Vertical
Via slots in the mounting plate or via cam adjustment

COMPONENT PARTS

DESCRIPTION	PART NAME	QTY(PCS)	DESCRIPTION	PART NAME	QTY(PCS)
1	Table Top	1	10	Door	1
2	Table Bottom	1	11	Door	1
3	Left Side Panel	1	12	Door	1
4	Right Side Panel	1	13	Door	1
5	Middle Side Panel	1	14	Metal Legs	4
6	Shelf	1	15	Metal Legs	1
7	Shelf	1			
8	Back Panel	2			
9	Shelf	4			

Hardware List

A		Ø8x30mm	Wooden dowel	20 pcs
B		Ø6x35mm	Cam bolt	14 pcs
C		Ø15x11mm	Cam lock	14 pcs
D			Sticker	14 pcs
E		4mm	Allen Key	1 pcs
F		Ø6x50mm	Screw	6 pcs
G			Hinge	8 pcs
H		Ø3.5x14mm	Screw	48 pcs
I			Glue tube	1 pcs
J			Handle	4 pcs
K		Ø4x20mm	Screw	8 pcs
L			Door stopper	4 pcs
M			Metal piece	4 pcs
N		Ø3x16mm	Screw	28 pcs
O			Plastic wedge	12 pcs
P		Ø8x5x16mm	Shelf support pin	16 pcs
Q		Ø4x16mm	Screw	20 pcs

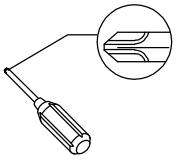

Philips head screwdriver required for assembly
(not included)

The hardware quantities listed above are required for proper assembly.
Some extra hardware may also have been included.

Step 1

B x 8
Ø6x35mm

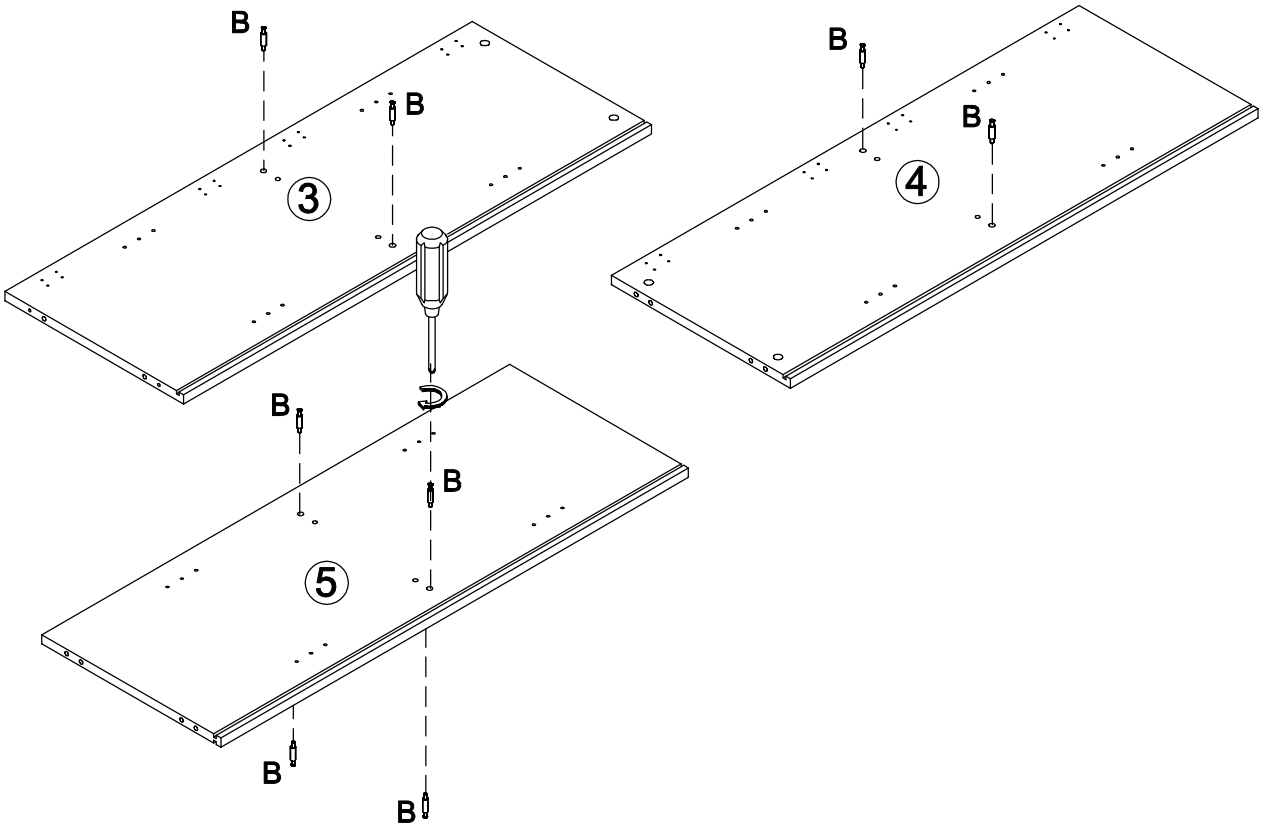

Step 2

L x 4	N x 8	B x 6
	Ø3x16mm	Ø6x35mm

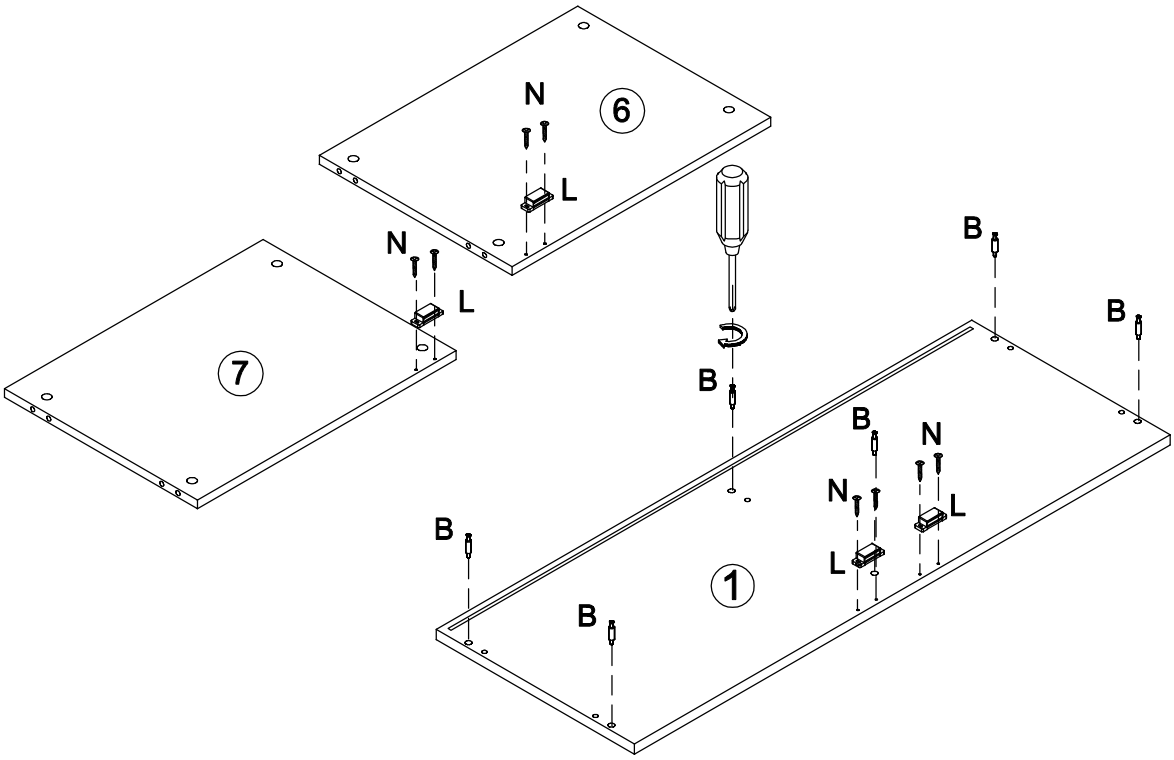

Step 3

A x 8	C x 8
Ø8x30mm	Ø15x11mm

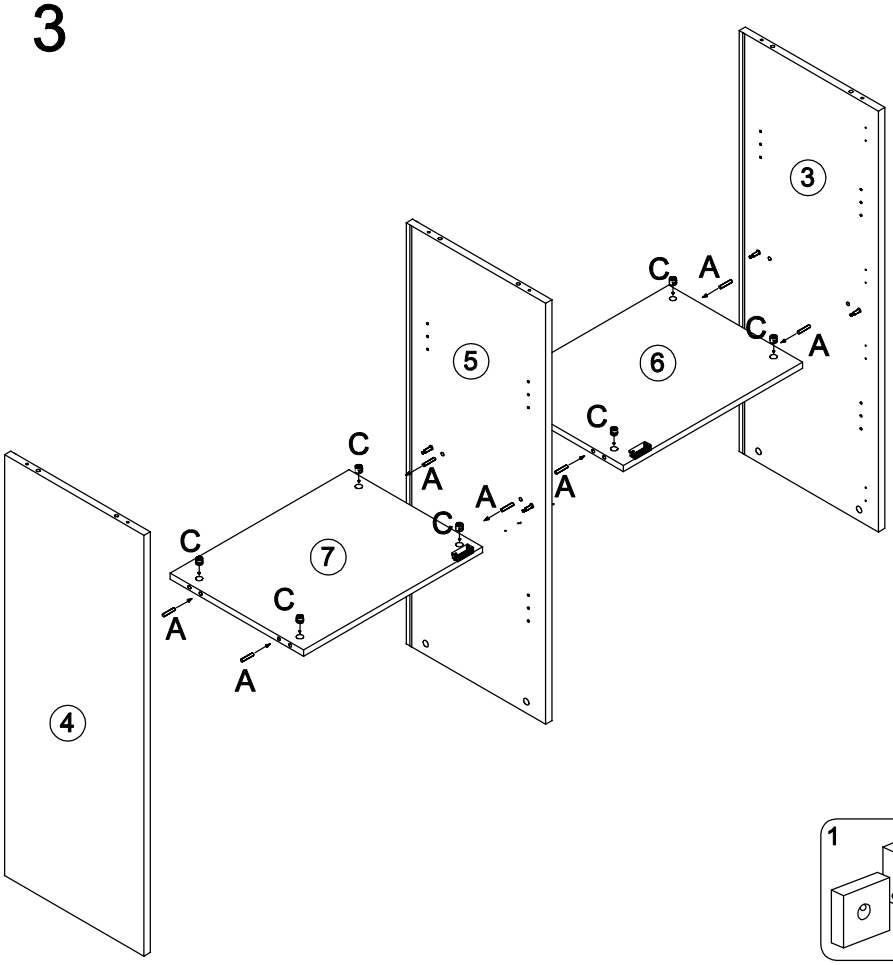

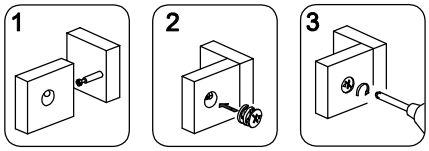

Step 4

A x 6	C x 6
Ø8x30mm	Ø15x11mm

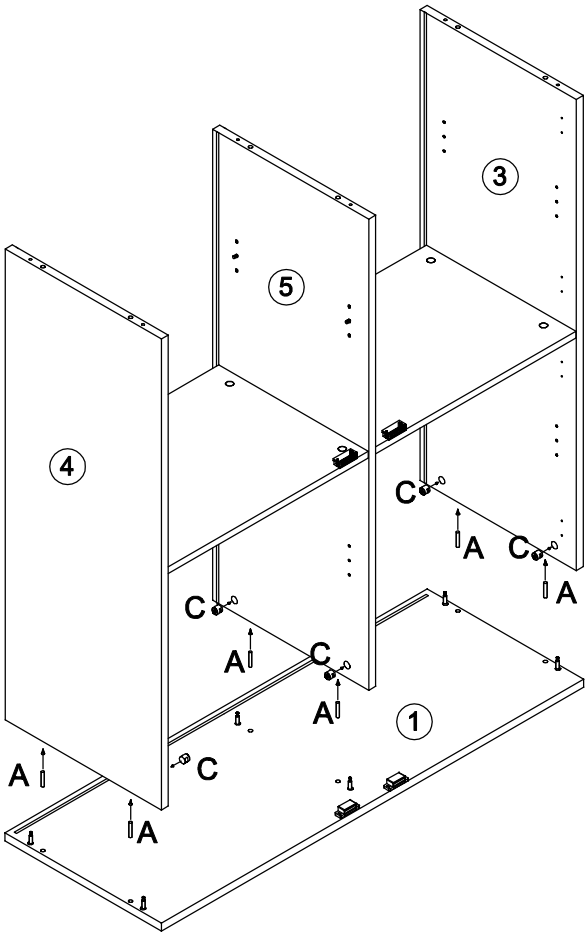

Step 5

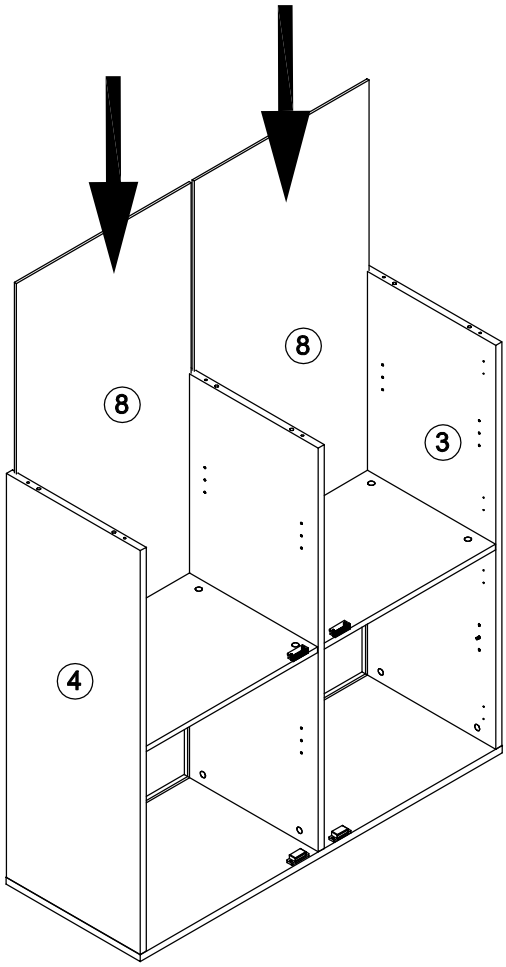

Step 6

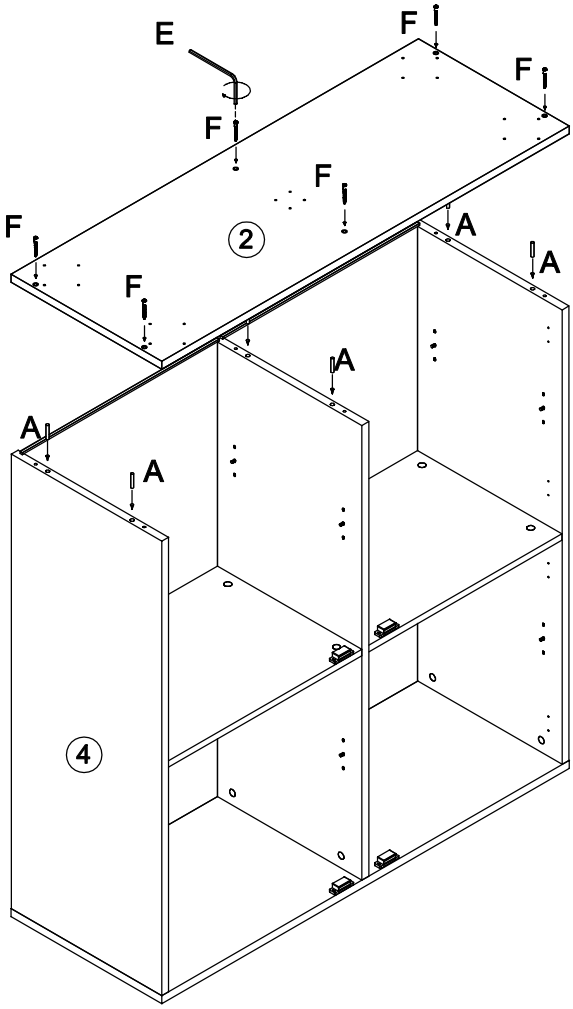

A x 6	E x 1	F x 6
Ø8x30mm	4mm	Ø6x50mm

Step 7

Q x 20

Ø4x16mm

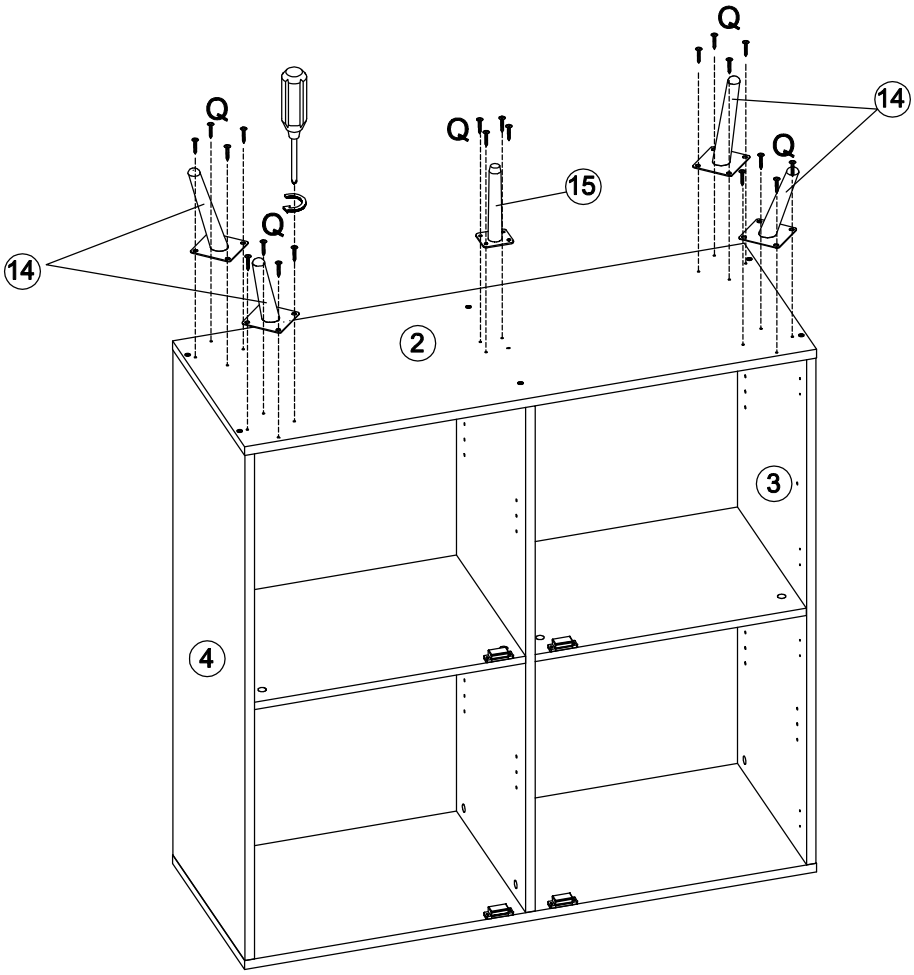

Step 8

D x 14

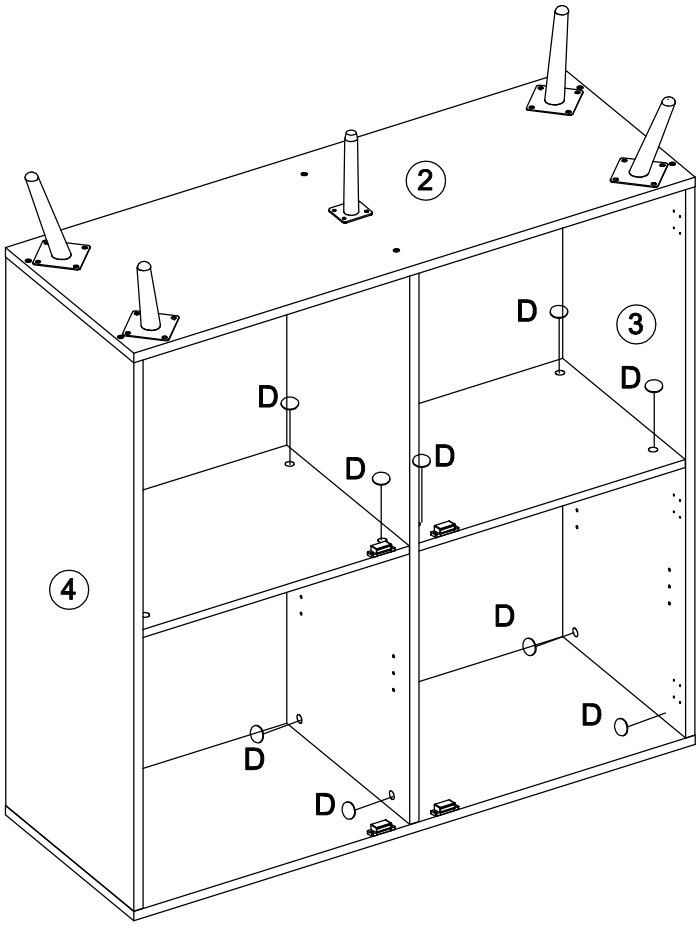

Step 9

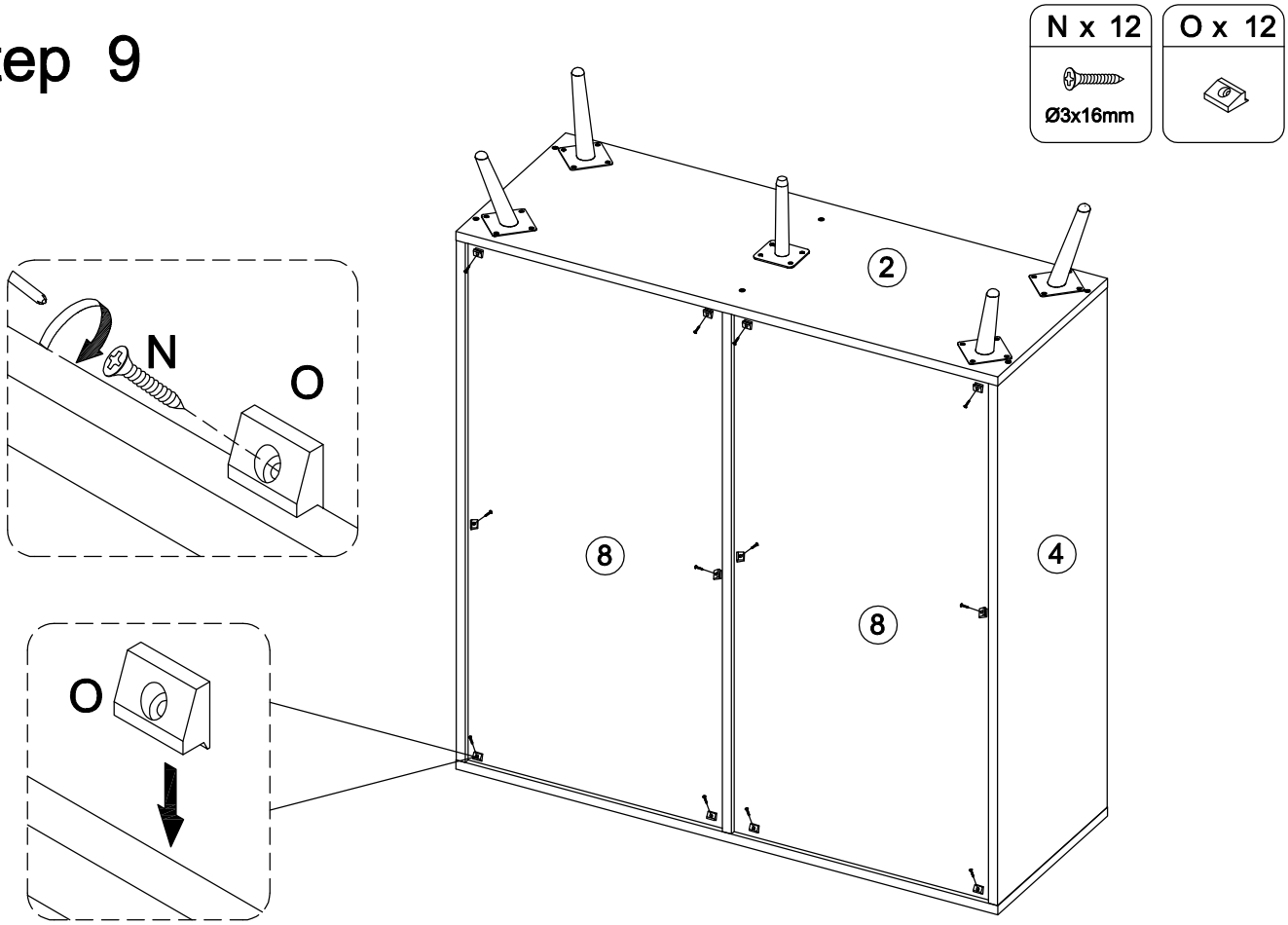

Step 10

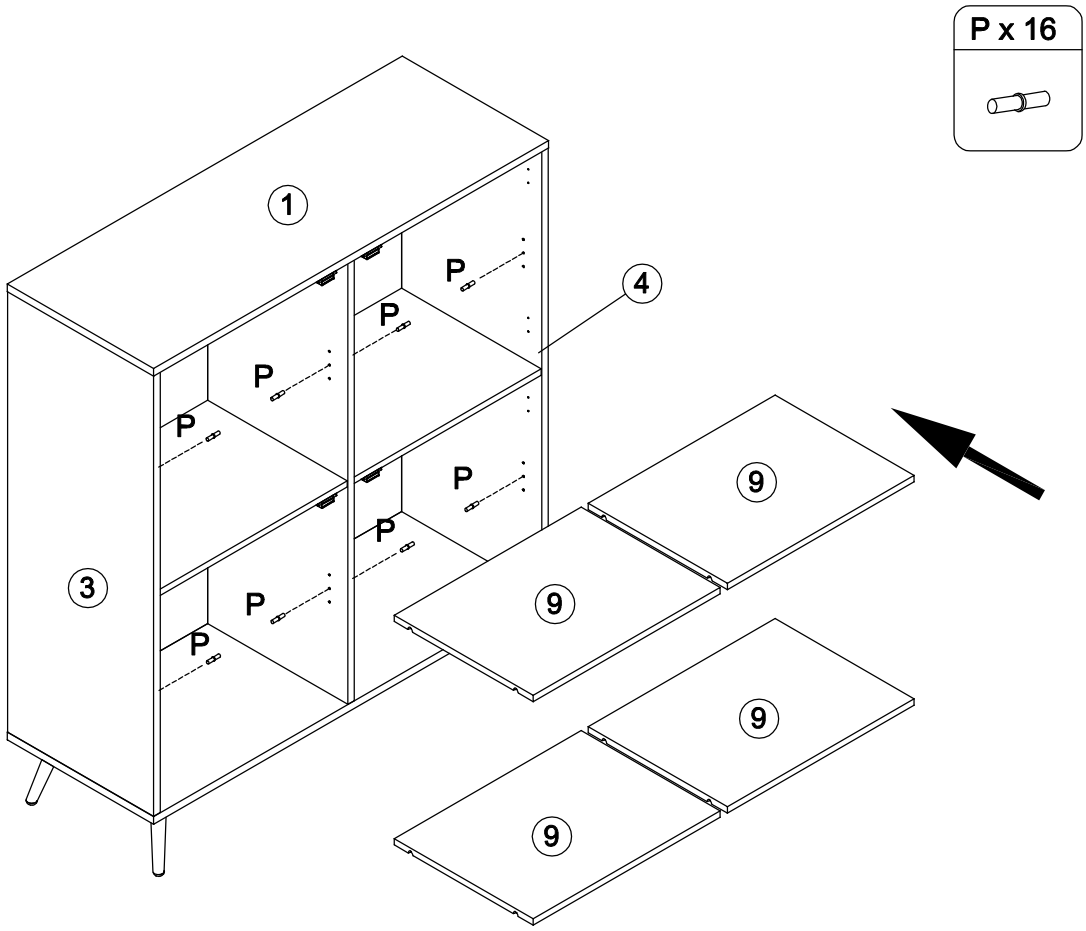

Step 11

G x 4	H x 8	J x 2	K x 4	M x 2	N x 4
	Ø3.5x14mm		Ø4x20mm		Ø3X16mm

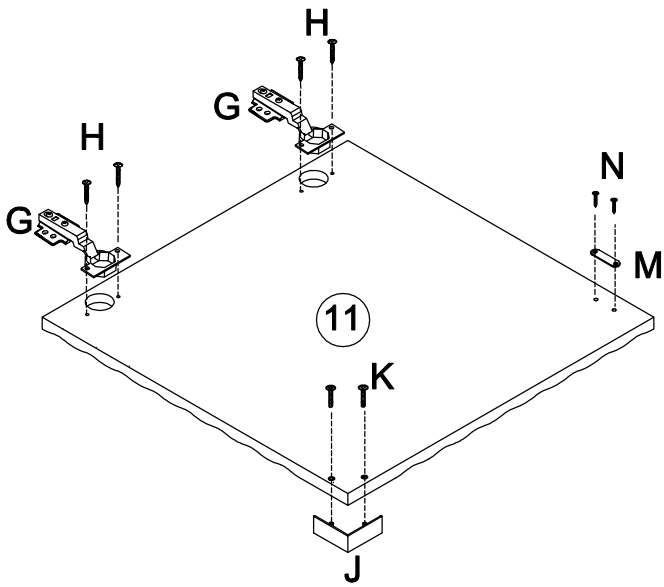

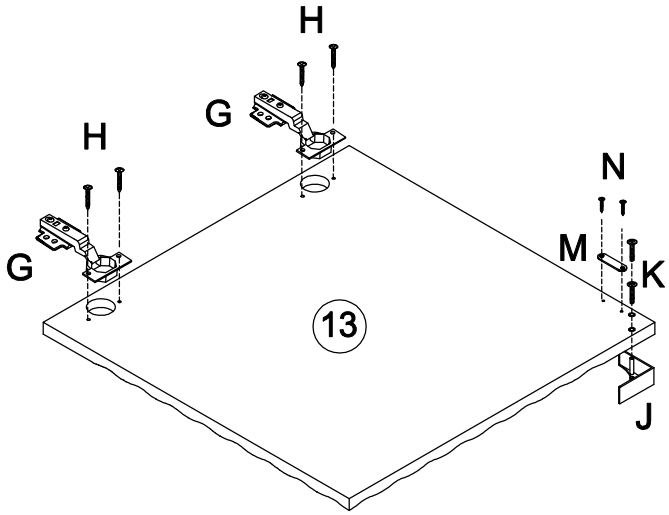

Step 12

G x 4	H x 8	J x 2	K x 4	M x 2	N x 4
	Ø3.5x14mm		Ø4x20mm		Ø3X16mm

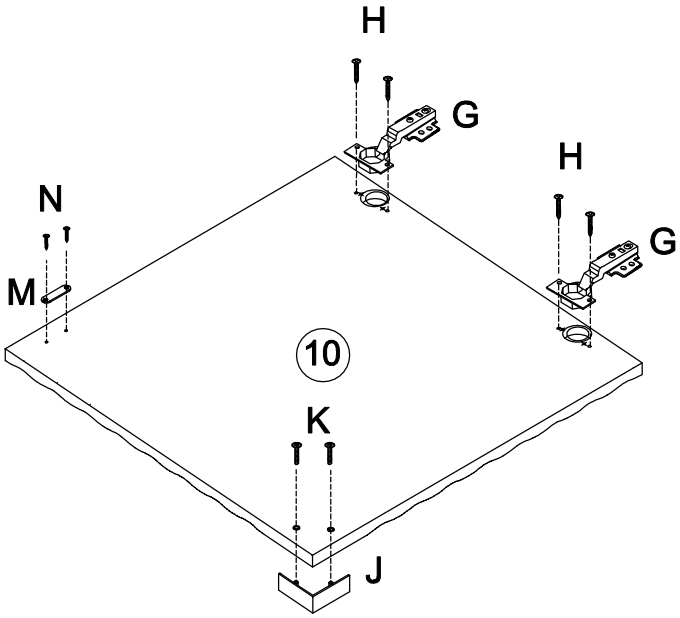

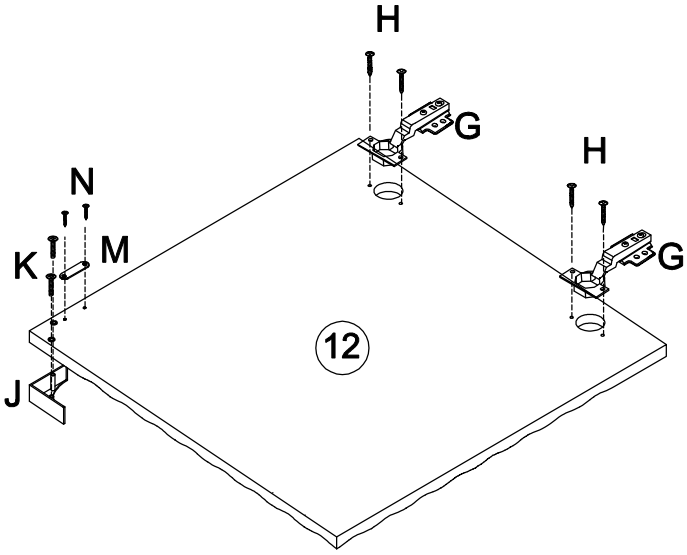

Step 13

G x 4	H x 16
	Ø3.5x14mm

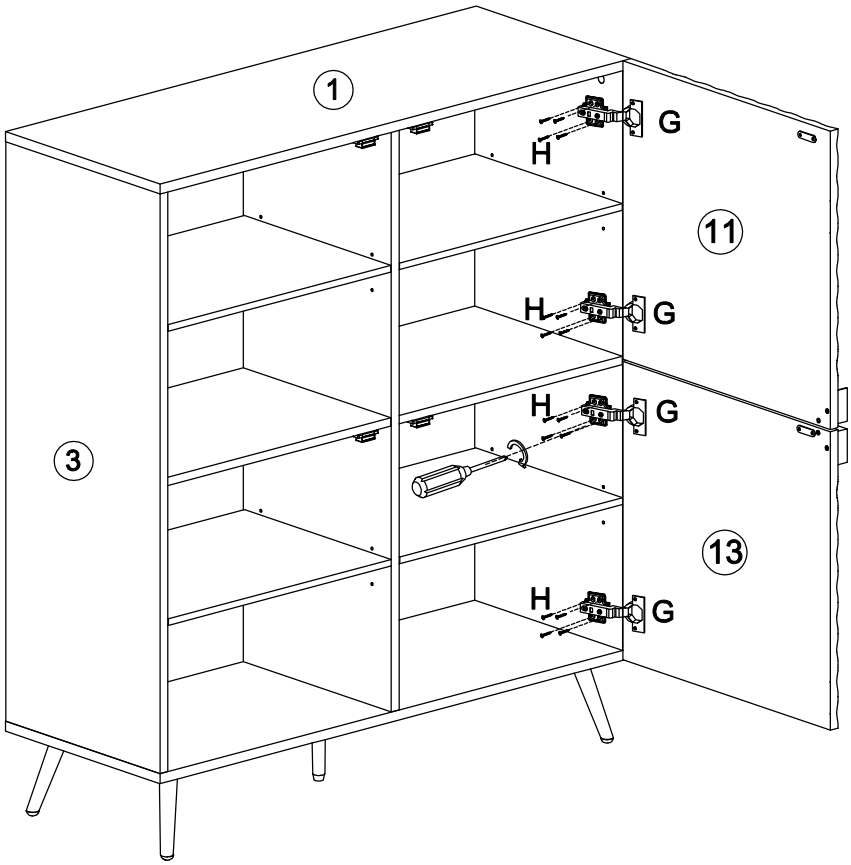

Step 14

G x 4	H x 16
	Ø3.5x14mm

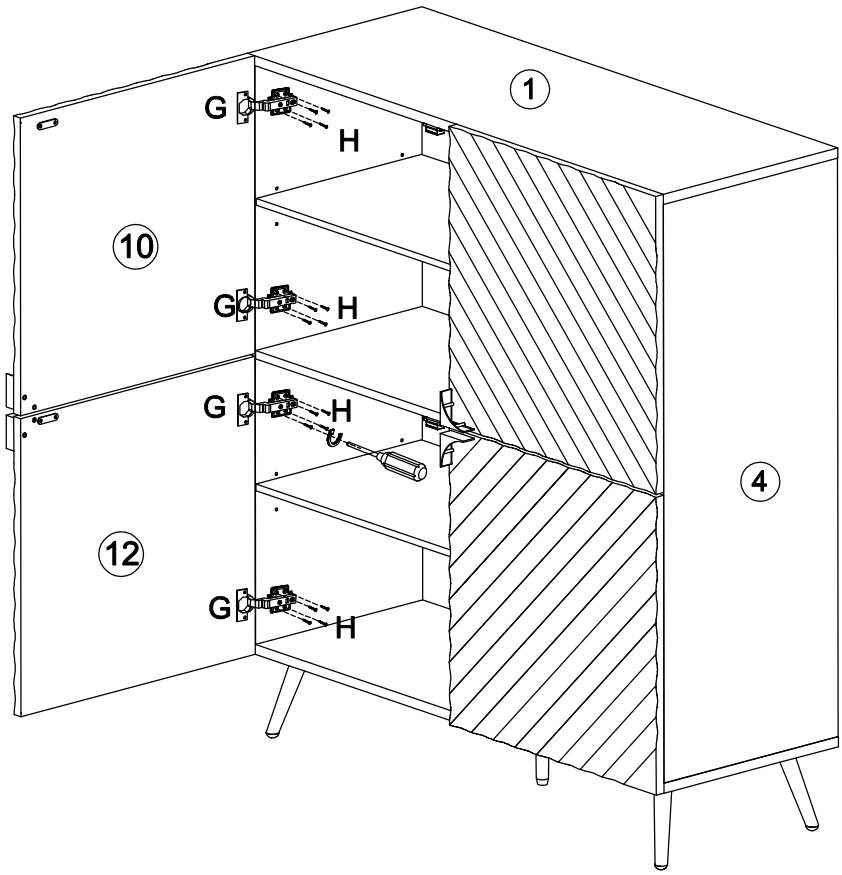

Step 15

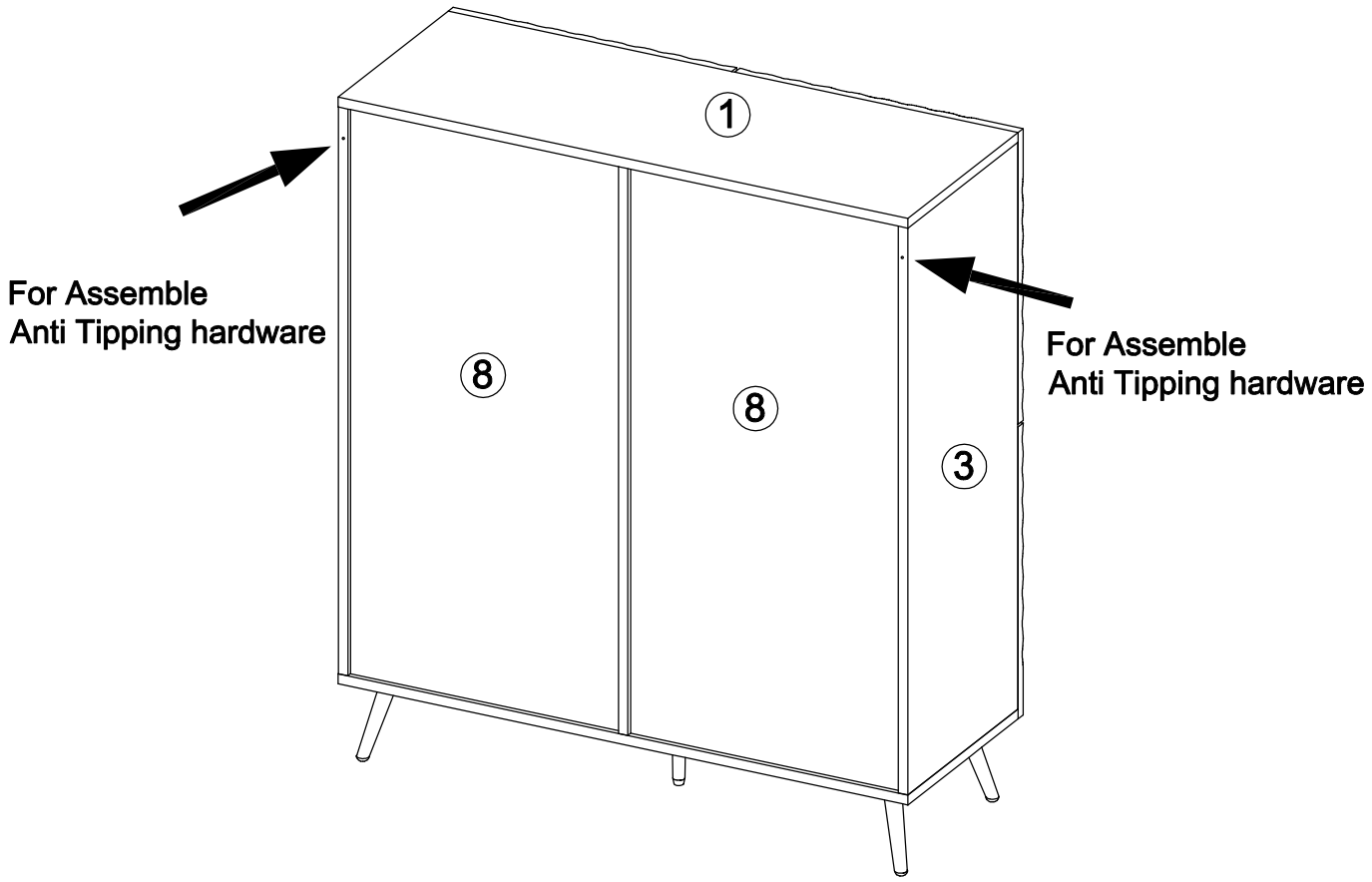

Step 16

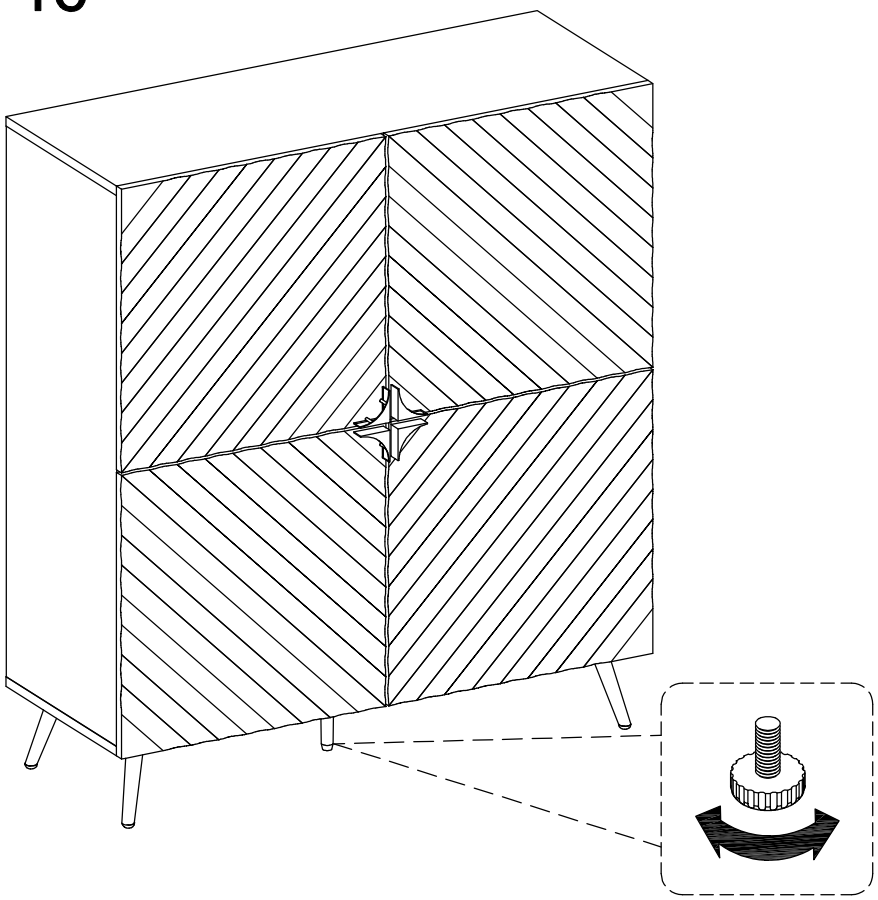

⚠ WARNING

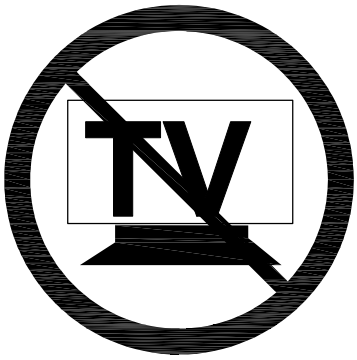

Children have died from furniture tipover. To reduce the risk of furniture tipover:

- ALWAYS install tipover restraint provided.
- NEVER put a TV on this product.
- NEVER allow children to stand, climb or hang on drawers, doors, or shelves.
- NEVER open more than one drawer at a time.
- Place heaviest items in the lowest drawers.