ASSEMBLY INSTRUCTION FOR ACME FURNITURE

MODEL#AC00159

Thank you for purchasing the quality product. Be sure to check all packing material carefully for small parts which may have come loose inside the cation during shipment. Seperate, identify and count all parts and metal hardware. Compare with all parts list to be sure all parts are present. If any part(s) are missing or damaged, please contact your local furniture dealer. For efficient and speedy service, please indicate the model number and code letter of part(s) needed.

*** Do not fully tighten screws until fully assembled ***

COMPONENT PARTS

DESCRIPTION	PART NAME	QTY (PCS)	DESCRIPTION	PART NAME	QTY (PCS)
①	SIDE FRAME 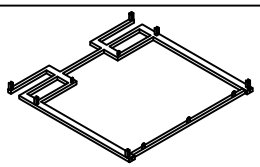	2	③	SHELF BOARD 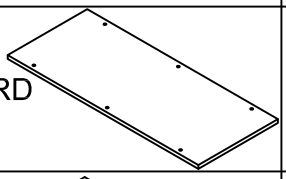	1
②	CROSS TUBE 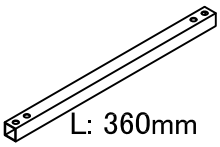 L: 360mm	6	④	GLASS 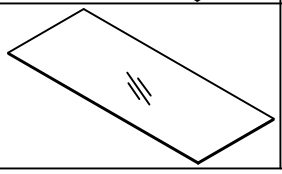	1

HARDWARE REQUIRED

Ⓐ		ALLEN KEY		1 PC
Ⓑ		WRENCH		1 PC
Ⓒ	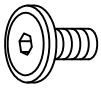	BOLT	ϕ1/4"*12mm	30 PCS
Ⓓ		SPLIT WASHER		4 PCS
Ⓔ		WHEEL		4 PCS
Ⓕ		SUCKER		4 PCS
Ⓖ		RUBBER MAT		4 PCS

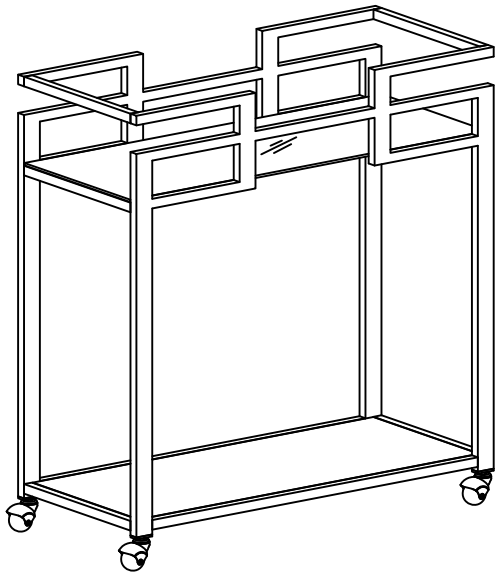

Attention

*** Assembly required: 2-people recommended.

*** Some number parts listed on the instruction sheet may not be in parts bag as they may already be assembled. Carefully check parts and packing materials prior to ordering replacements.

How to assemble:

STEP 1

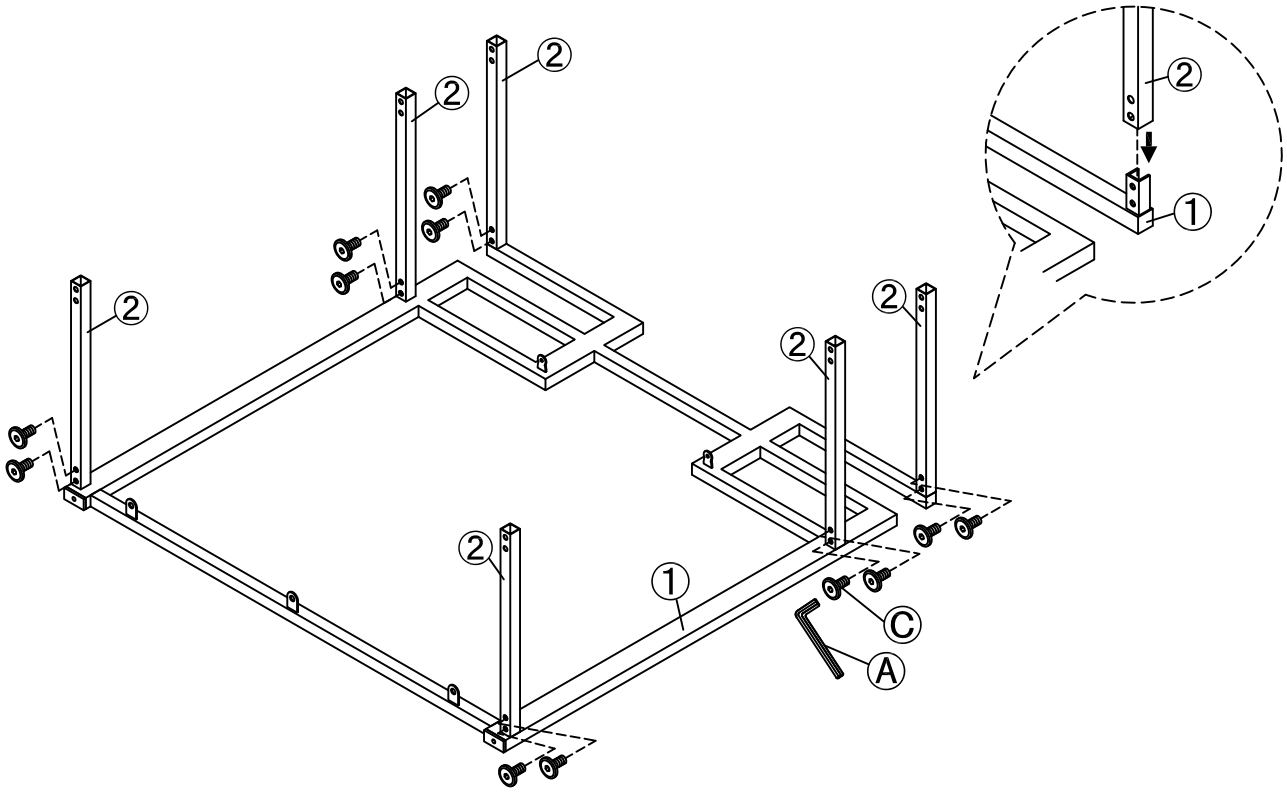

STEP 2

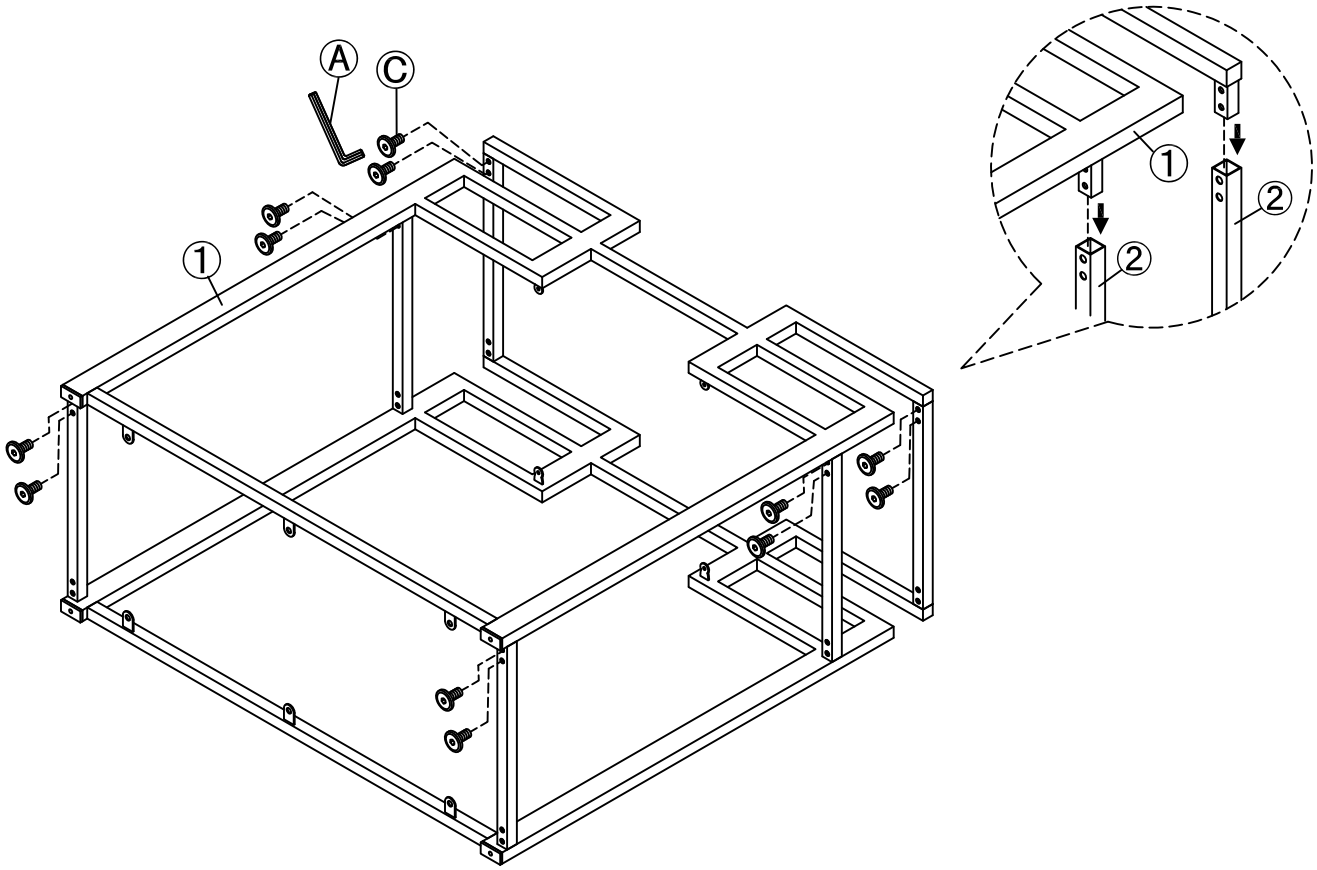

STEP 3

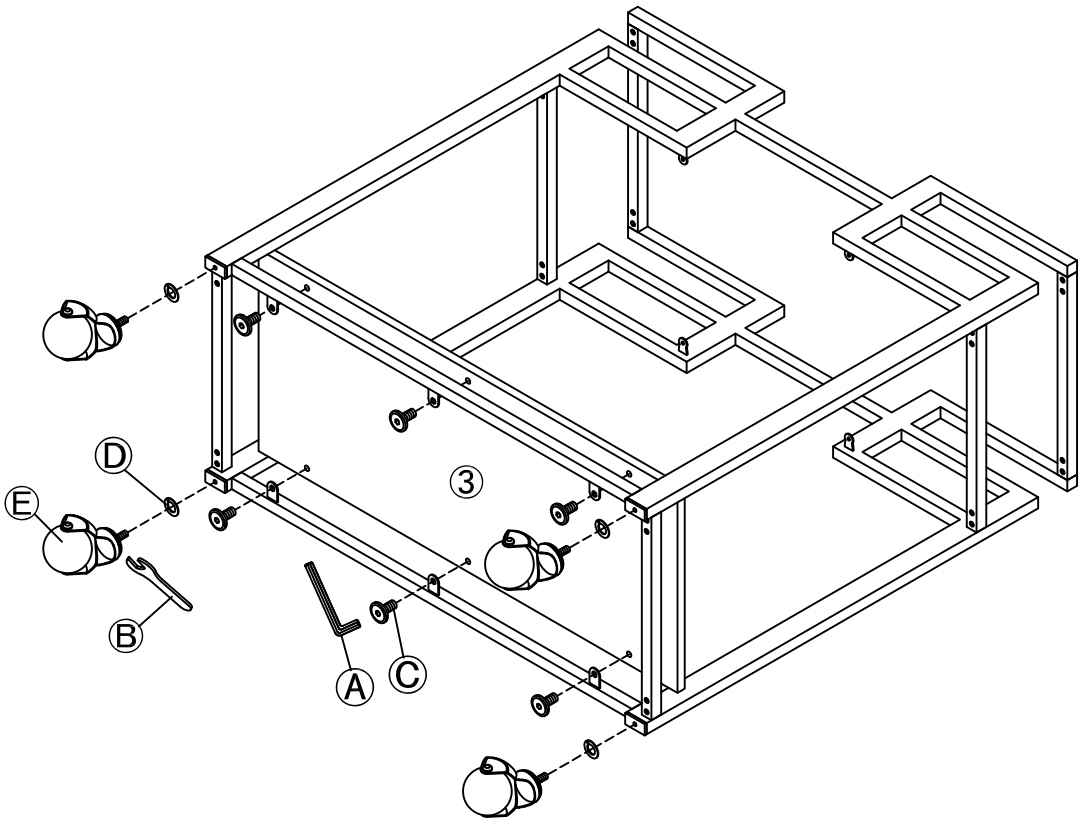
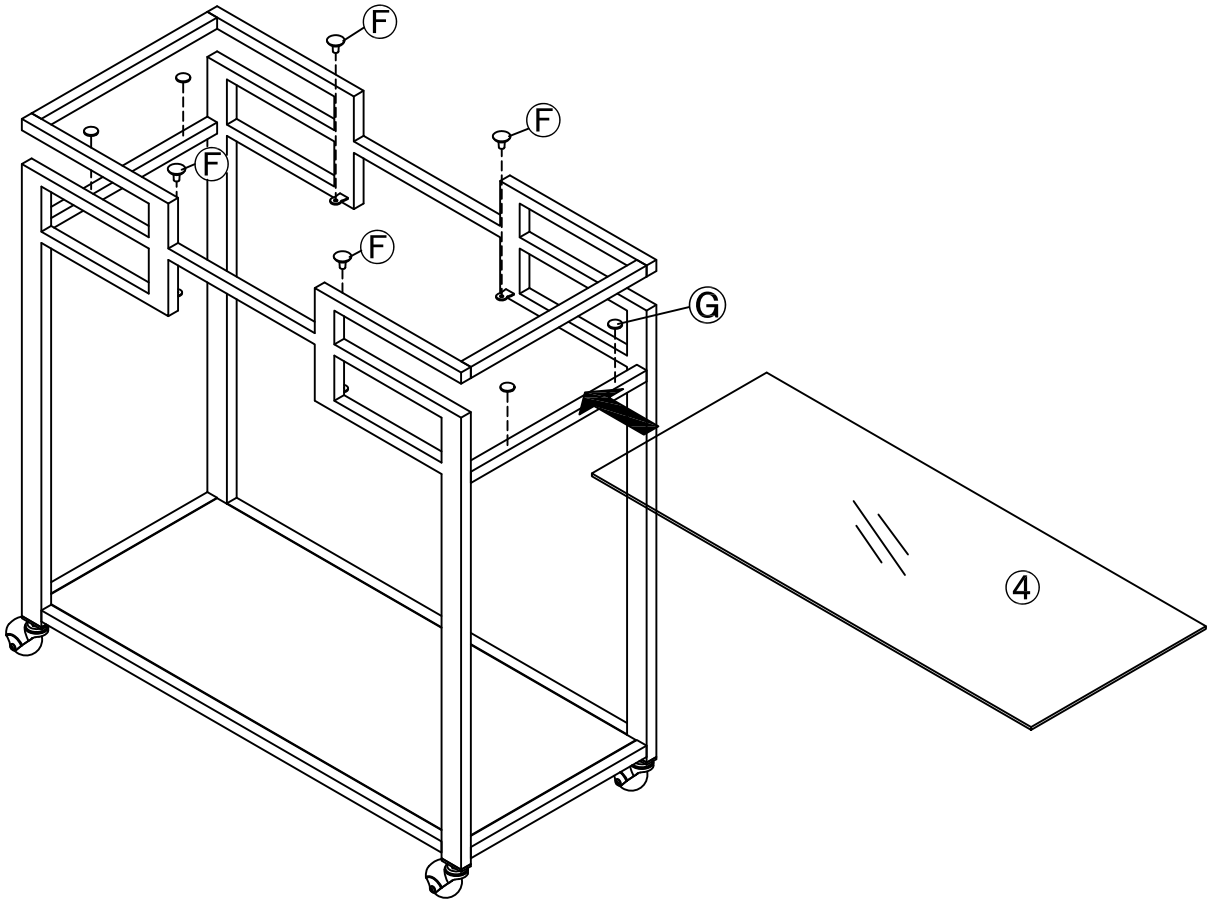
STEP 4