ASSEMBLY INSTRUCTIONS

ITEM NO.: 80192

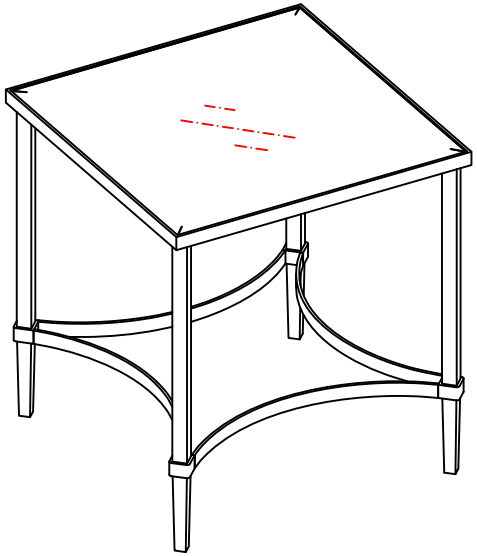

Do not tighten screws until completely assembled.

PARTS INDENTIFICATION

#1		MIRROR TOP	1 pc
#2		TOP FRAME	1 pc
#3		LEG	4 pcs
#4		STRETCHER	1 pc
#5		LEG	4 pcs

HARDWARE LIST

A		Bolt 1/4"X1/2"	8 pcs
B		Bolt 1/4″X7-5/8"	4 pcs
C		GLASS PLASTLC PAD	9 pcs
D		Allen Wrench M4	1 pc
E		Plastic Plug	4 pcs

STEP 1

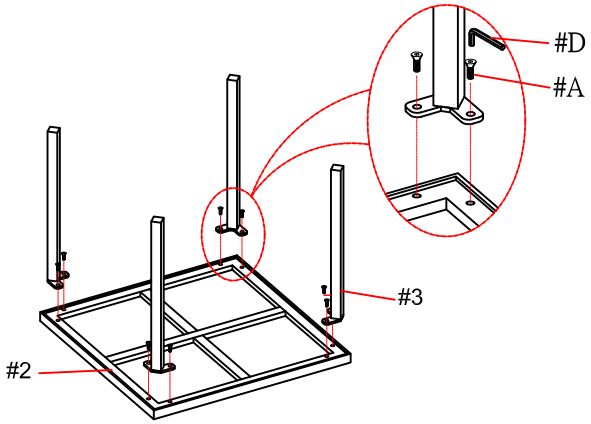

STEP 2

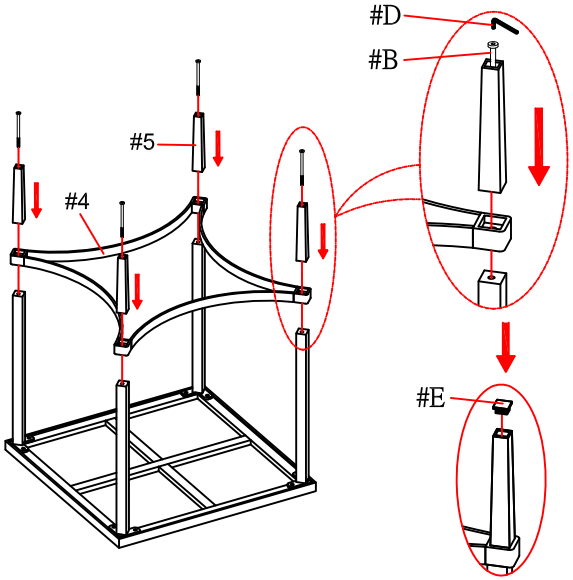
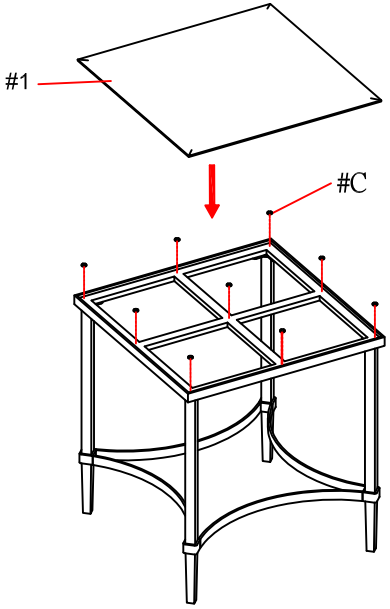
STEP 3