ASSEMBLY INSTRUCTIONS FOR ACME FURNITURE

MODEL#24524

Thank you for purchasing the quality product. Be sure to check all packing material carefully for small parts which may have come loose inside the carton during shipment. Separate, identify and count all parts and metal hardware. Compare with all parts list to be sure all parts are present. If any parts(s) are missing or damaged, please contact your local furniture dealer. For efficient and speedy service, please indicate the model number and code letter or part(s) needed.

*****Do not fully tighten screws until fully assembled*****

	COMPONENT PART	
DESCRIPTION	PART NAME	QTY
①	Mirror	1pc
②	Dresser	1pc
③	Mirror Support	2pcs

HARDWARE REQUIRED

Ⓐ CSK Screw M4 x 25MM - 8pcs

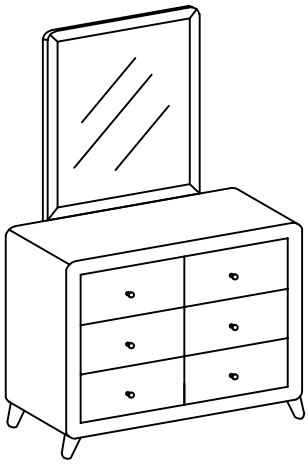

Attention:

*** Some number parts listed on the instruction sheet may not be in parts bag as they may already be assembled. Carefully check parts and packing materials prior to ordering replacements.

How to assemble:

STEP 1 : Attach the Mirror support (3) to the back at the Mirror (1) as shown.

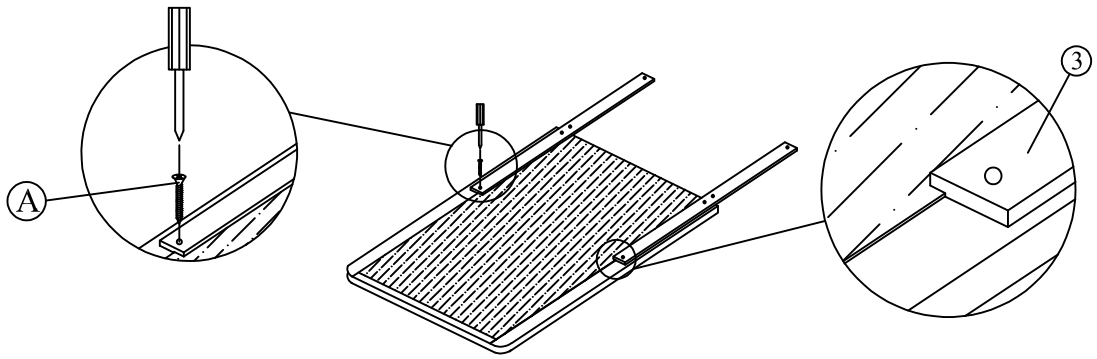

STEP 2 : Using the CSK Screw (A) tighten the Mirror (1)with Mirror support (3) to the back of Dresser (2).

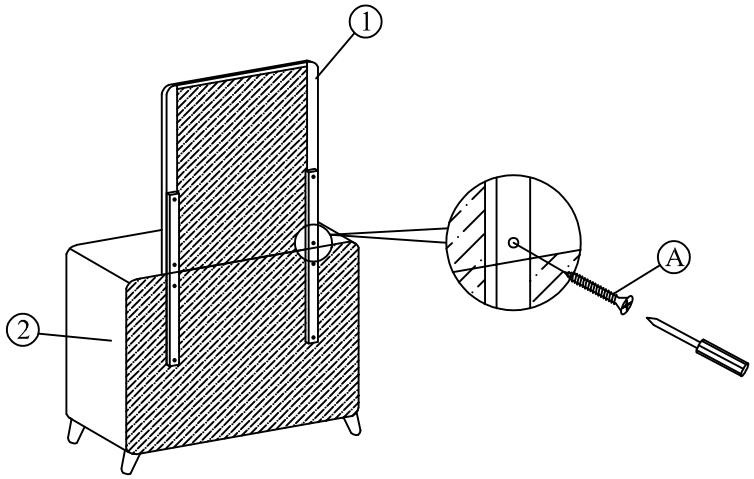
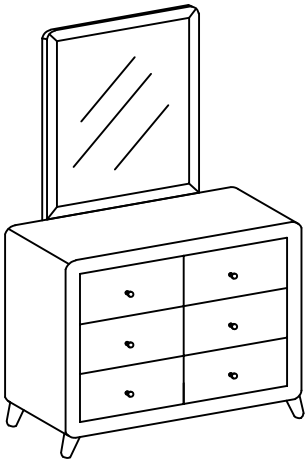
STEP 3 : Assembly complete.