ASSEMBLY INSTRUCTION

MODEL : ISABELLA-GREY-NS W/LED
ISABELLA-WHITE/BLACK-NS W/LED

DESCRIPTION : NIGHTSTAND WITH LED

Thank you for purchasing this quality product. Be sure to check all packing material carefully for small parts which may have loose inside the carton during shipment. Identify and count all parts and compare with the parts list below.

STEP 1:

Lift the Glass-Top (D) gently and carefully place it at safe area before assembly begin.

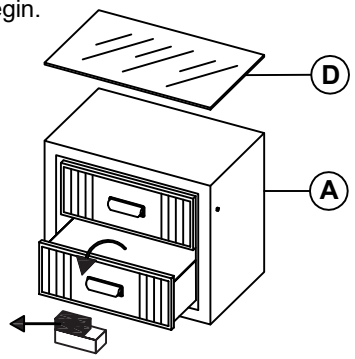

L-Shaped Leg (B) & Round Leg (C) 's Box, and Adapter Plug (F) 's Box

STEP 2:

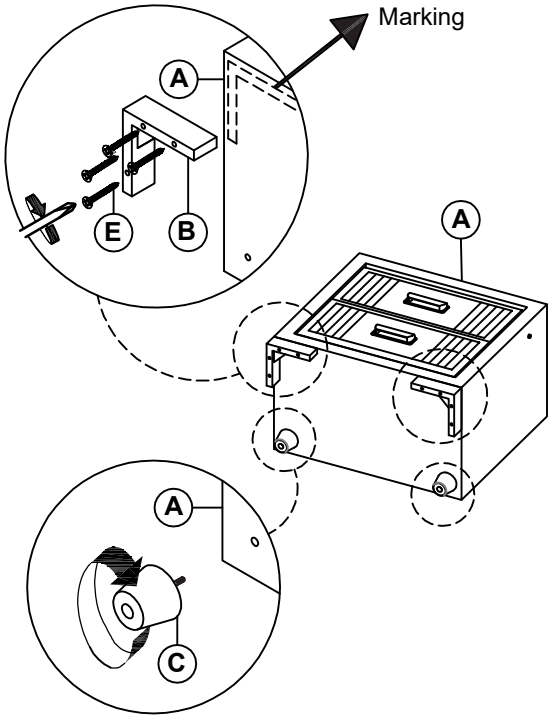

STEP 3:

Place the Glass-Top (D) to the Top Surface of Nightstand (A).

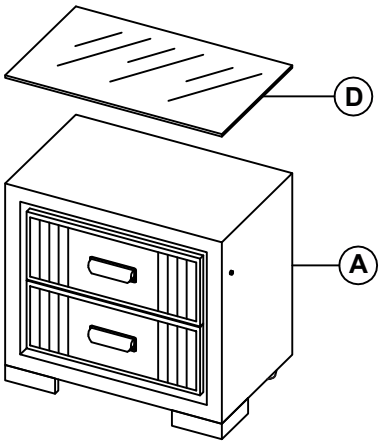

PART LIST:

No.	Description	Diagram	Quantity
A	Nightstand		1
B	L-Shaped Leg		2
C	Round Leg 2"		2
D	Glass-Top		1

HARDWARE LIST:

No.	Description	Diagram	Quantity
E	CSK Screw (M4 x 45mm)		8
F	Adapter Plug		1

STEP 4:

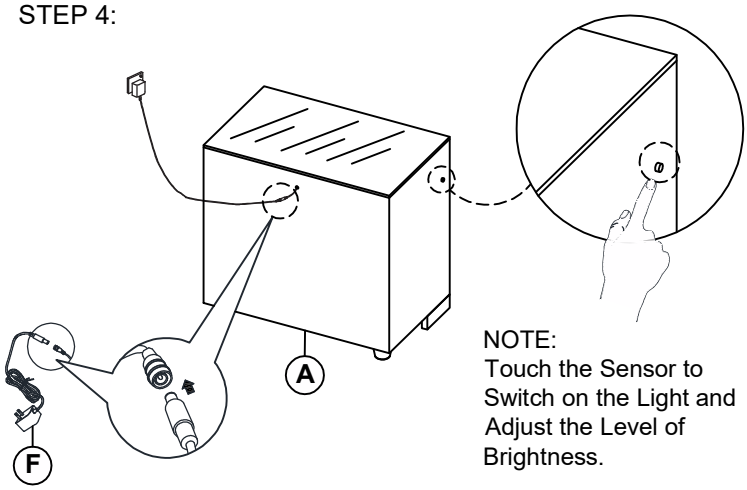

NOTE:
Touch the Sensor to Switch on the Light and Adjust the Level of Brightness.

STEP 5:
COMPLETE

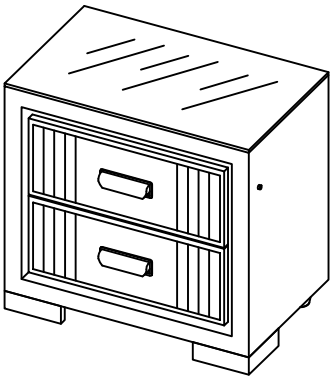

MADE IN MALAYSIA

V0 (25-05)

ISABELLA

ANTI-TIPPING INSTALLMENT

MODEL : ISABELLA-GREY-NS W/LED
ISABELLA-WHITE/BLACK-NS W/LED

DESCRIPTION : NIGHTSTAND WITH LED

Thank you for purchasing this quality product. Be sure to check all packing material carefully for small parts which may have loose inside the carton during shipment. Identify and count all parts and compare with the parts list below.

PART LIST:

No.	Description	Diagram	Quantity
A	Casegood		1

HARDWARE LIST:

No.	Description	Diagram	Quantity
B	Bracket		2
C	Strap		1
D	Long Screw 50mm		1
E	Short Screw 15mm		1

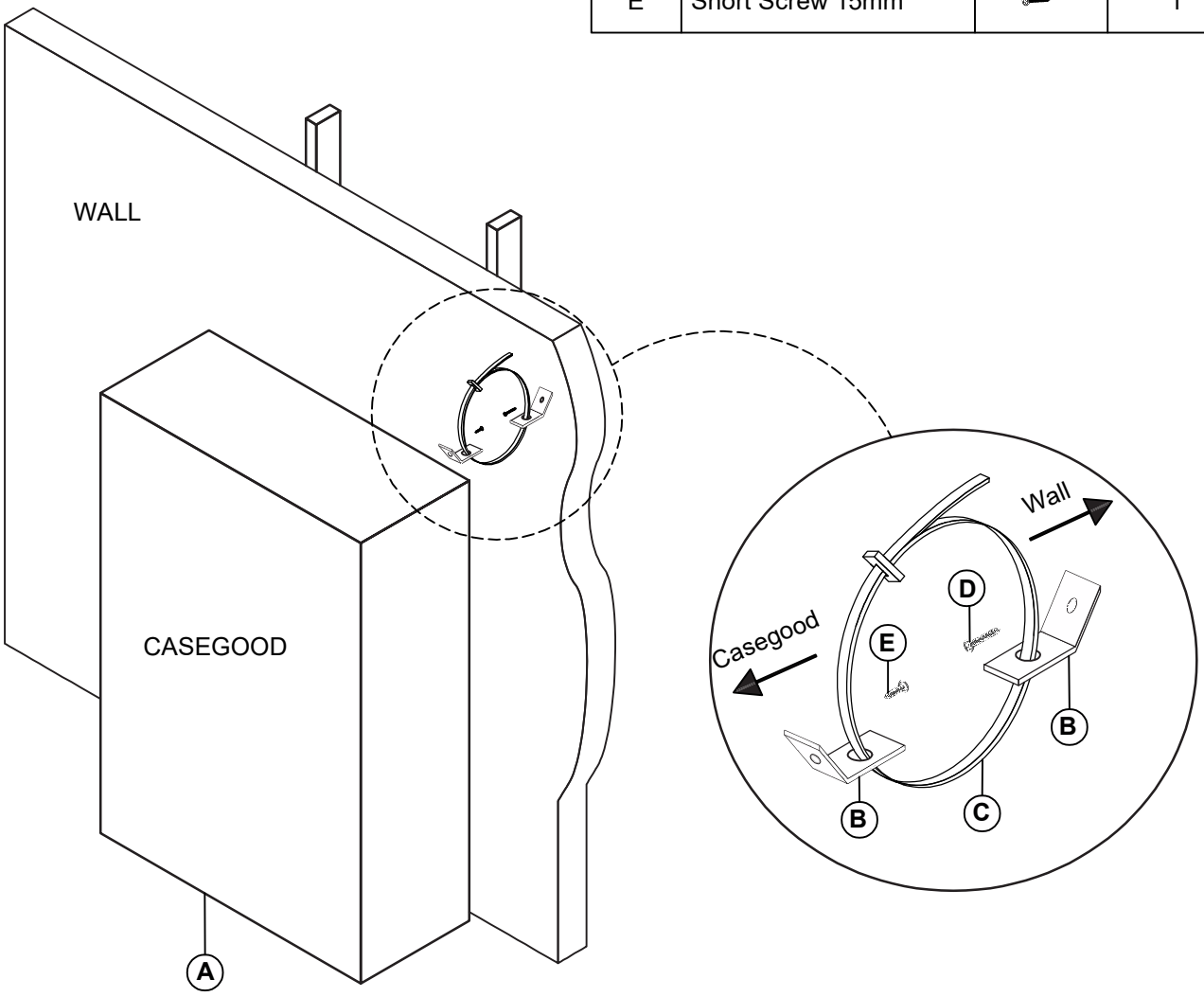

MADE IN MALAYSIA
ISABELLA