Assembly Instruction

DD-F02

Model No : KBF 210 DRESSER

Thank you for purchasing this quality product.
Please check all packing material carefully which may have come loose inside the carton during shipment.

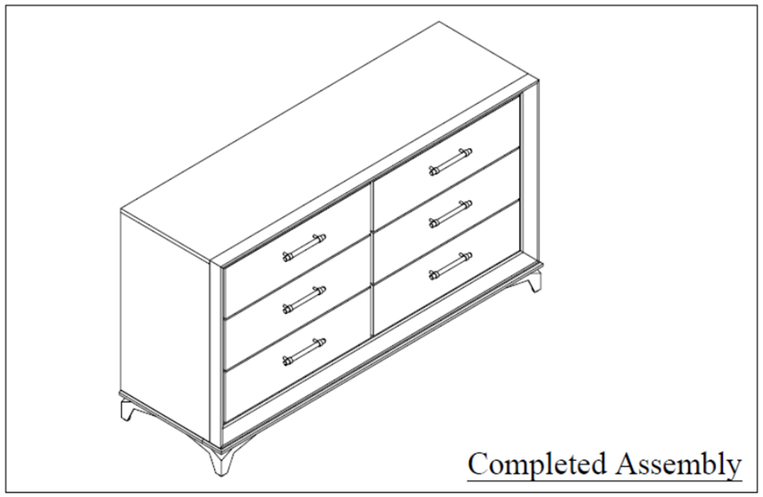

Completed Assembly

PART LIST

No	Description	Qty
1	Casegoods	1pc
2	Legs	4pcs

HARDWARE LIST

No	Description	Qty
A	CSK Screw M3.5 x 20mm	24pcs
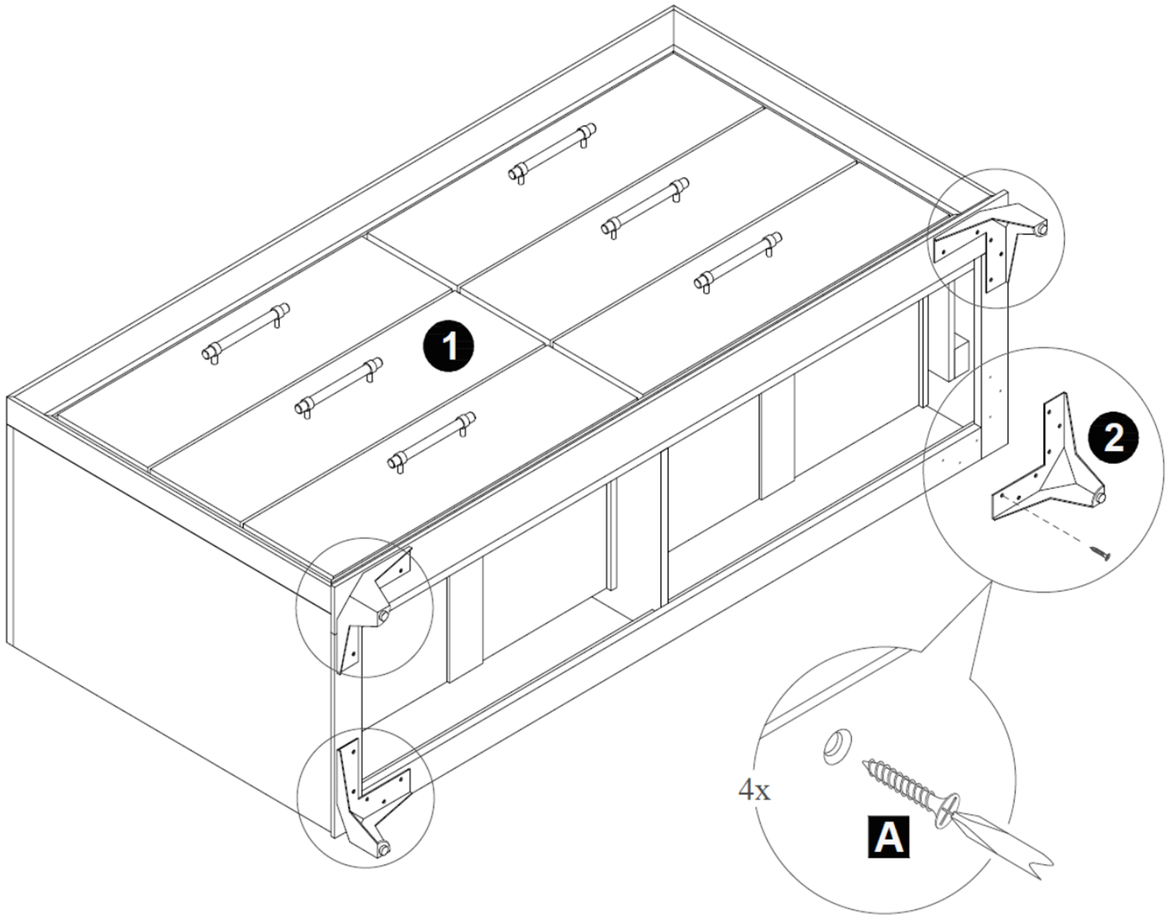
Place the Dresser lying down position to ease the assembly process.