ASSEMBLY INSTRUCTIONS

REV.8-WT-9446-0226

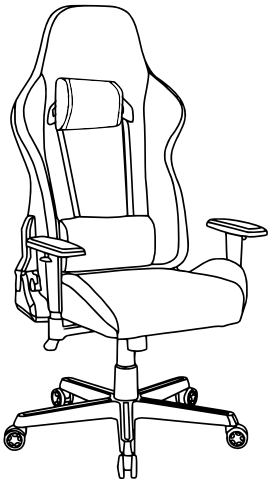

NOTE: The illustrations are a general representation of our gaming chairs. The styles, materials, colors and features vary by series and models.

HARDWARE LIST

L	x4	M8x20
M	x12	M8x25
N	x2	M5x12
O	x16	Ø12, Ø9 O-Ring
P	x16	Ø17, Ø9 Metal washer
Q	x4	Ø25, Ø9 Felt washer
R	x4	Ø14, Ø11 Caps
	x1	M5 Allen key (M5)

MAIN PARTS LIST

A Backrest

B Seat

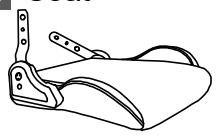

*** PLEASE READ NOTE BELOW**

C Star base

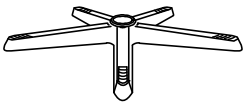

D Mechanism

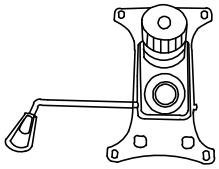

E Lift cylinder

F Casters

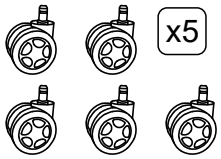

G-L Left armrest

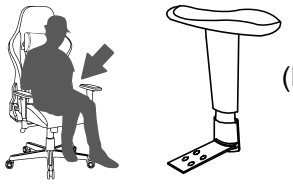

G-R Right armrest

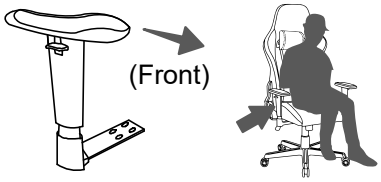

H Covers for lift cylinder

x1 Set

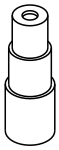

I-L Left cover

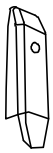

I-R Right cover

J-L Lumbar pillow

NOTE: Some models don't use pillow, or use a different shape, or is strap-less.

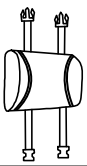

J-N Neck pillow

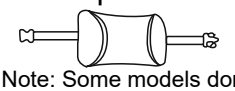

Note: Some models don't come with a neck pillow.

*** The left metal bracket on the seat is loose, while the right is stiff and can only move until the chair is assembled.**

For Support, Assembly Questions & Replacement Parts within the 48 *Contiguous* United States:
Please email us at:
support@technisportusa.com

Replacement Parts for International Customers & **AK-HI-PR** orders:
RTA Products will replace the part free of charge, while **the customer is responsible for shipping costs plus any International local taxes or duties**.

Techni Sport Chairs

ASSEMBLY STEPS

STEP 1

Assemble D to B with L, O and P.

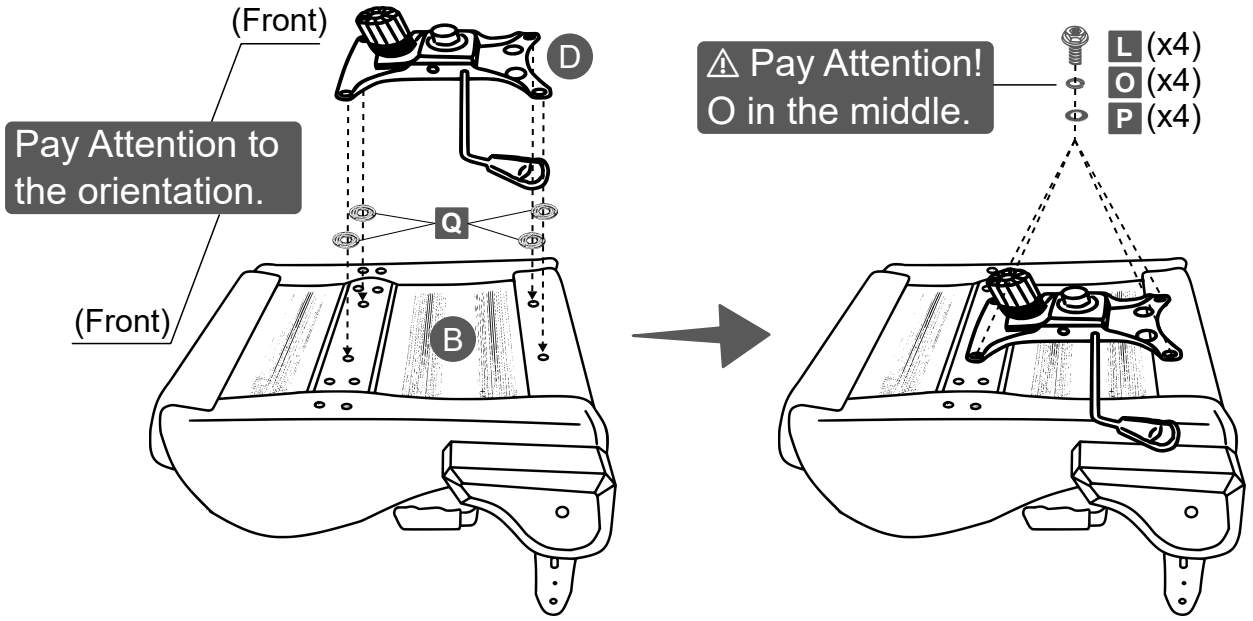

STEP 2

Assemble G-L and G-R to B with M, O and P.

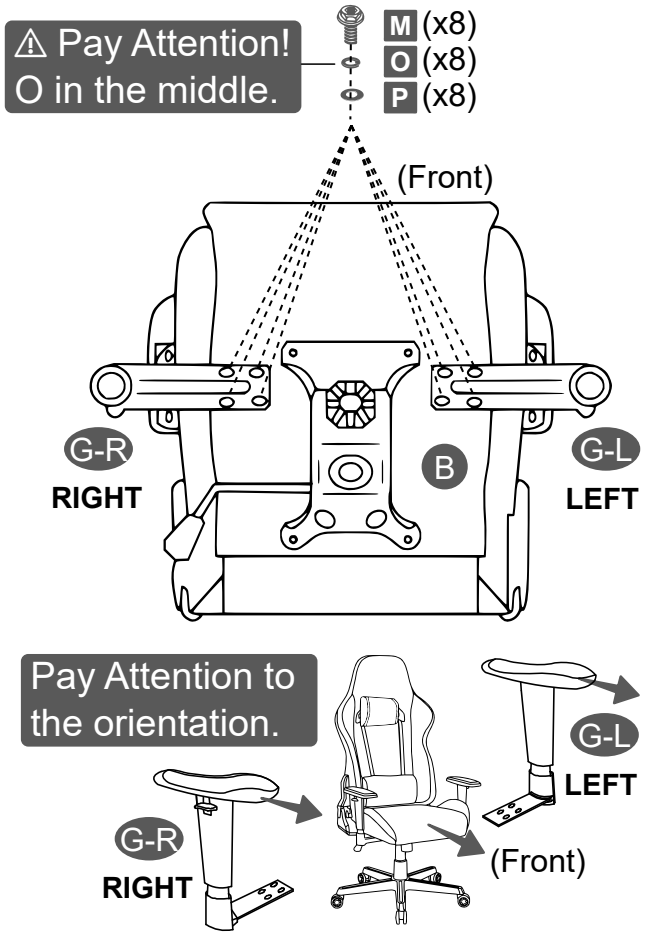

STEP 3

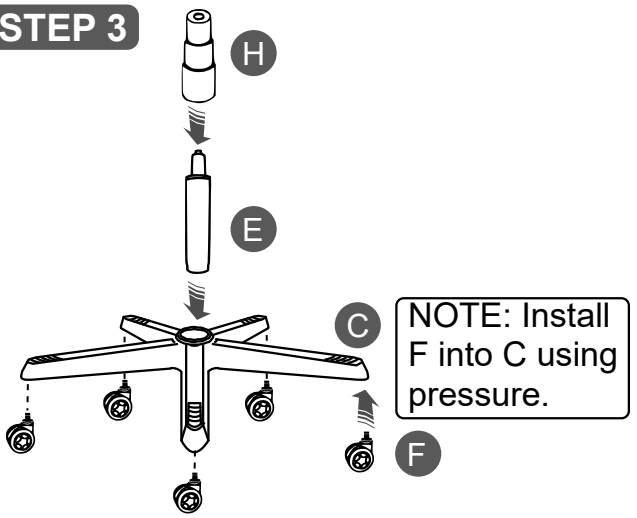

STEP 4

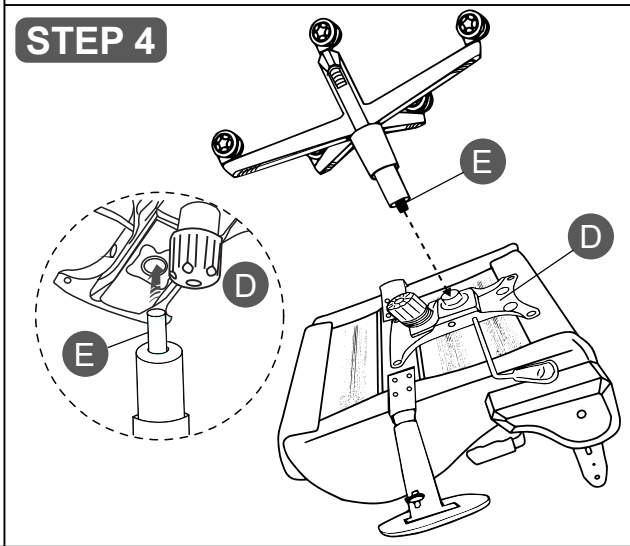

ASSEMBLY STEPS

STEP 5

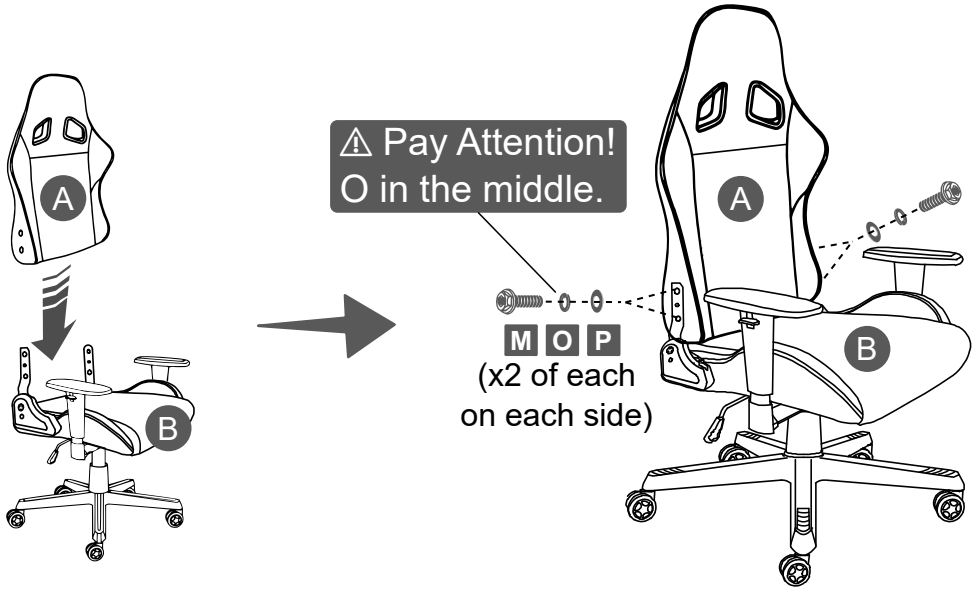

STEP 6

FIRST: Attach I-L, I-R to B with N.
THEN: Cover the holes with R.

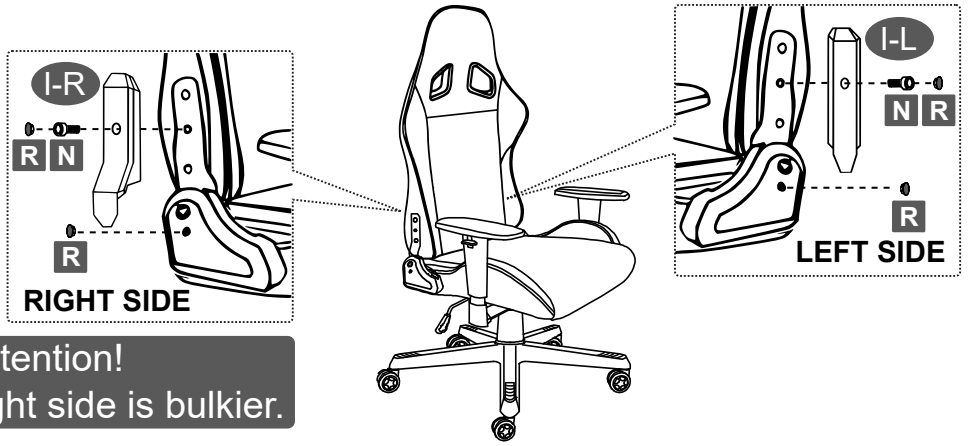

⚠ Pay Attention!
I-R for right side is bulkier.

STEP 7

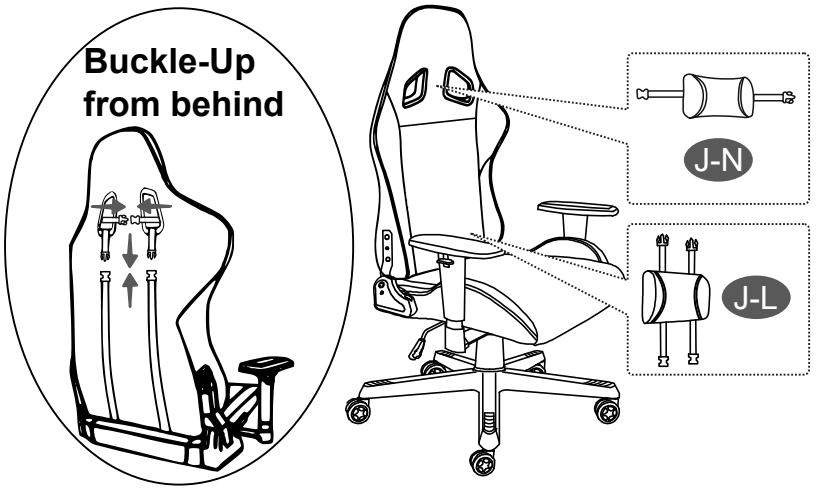

NOTE: Some models don't come with pillows, or use a different shape of pillow, or are strap-less.
Please check/verify first if your model uses or no any pillows before reaching out to us.
Thank you.

Techni Sport Chairs

CHAIR'S FUNCTIONS

⚠ WARNING! For your safety, the tilting function should be LOCKED (IN) prior to reclining the backrest.

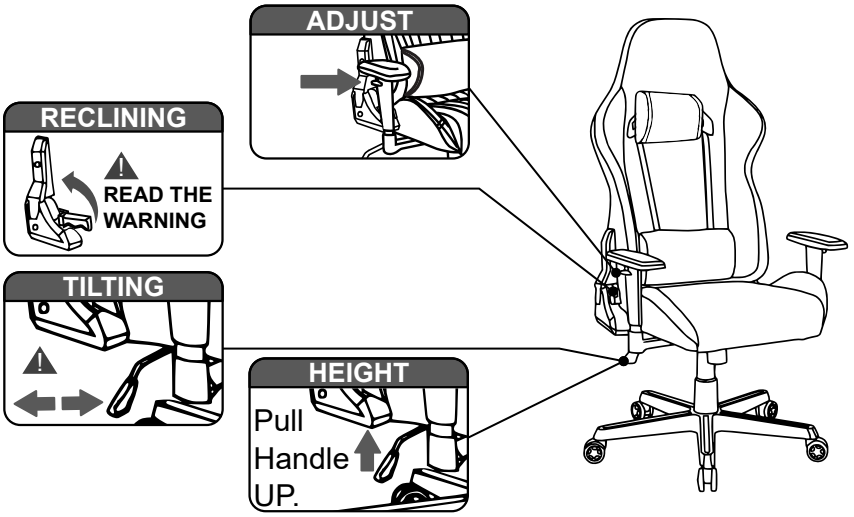

Handle OUT: Unlocked; Handle IN: Locked.

WARNINGS - Not paying attention to the following warnings could result in injuries.

Weight Limits

Please refer to the weight limit for your model in the wbsite, and do not exceed.

Only one person at a time and refrain from sitting on the edge of the seat to prevent the chair from tipping over.

Do not stand on the chair or use it as a ladder.

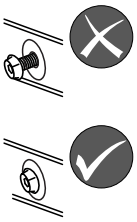

Do not use the chair if the frame parts are damaged, or if any of the screws are loose or missing.

Do not leave babies or toddlers unattended while seated on the chair, always ensure adult supervision. Keep children from playing with the chair for their safety.

CARE AND MAINTENANCE

Clean with a soft cloth lightly damped in a solution of smooth soap and water.

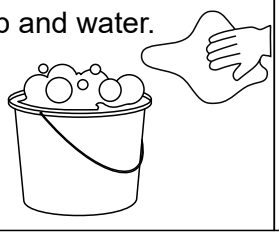

Do not use solvents or abrasive materials.

Do not expose to direct sunlight or to extreme environmental conditions.

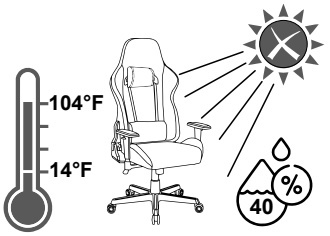

Inspect the chair throughly every 4 months and re-tighten the screws.

LIMITED WARRANTY

For questions about the Warranty Policy, or to file a claim, please contact us by email: **warranty@rtaproducts.com**