F.B.G. PRODUCT DATA SHEET

STYLE B42333

DESC. GRAFTON TWIN HEADBOARD

DOMESTIC -

IMPORT X

VENDOR INFORMATION:
LOCATION TAIWAN
NAME ID
NUMBER -

HARDWARE NEEDED?
Y X
N -

DES. ID

SPINDLE COUNT

ISSUE B 3/3 3 5/0 5

DATE 01-04-07 4/6 5 6/6 5

FINISH(S): RUSTY GOLD
FINISH PROCESS: ONE STEP POWDER

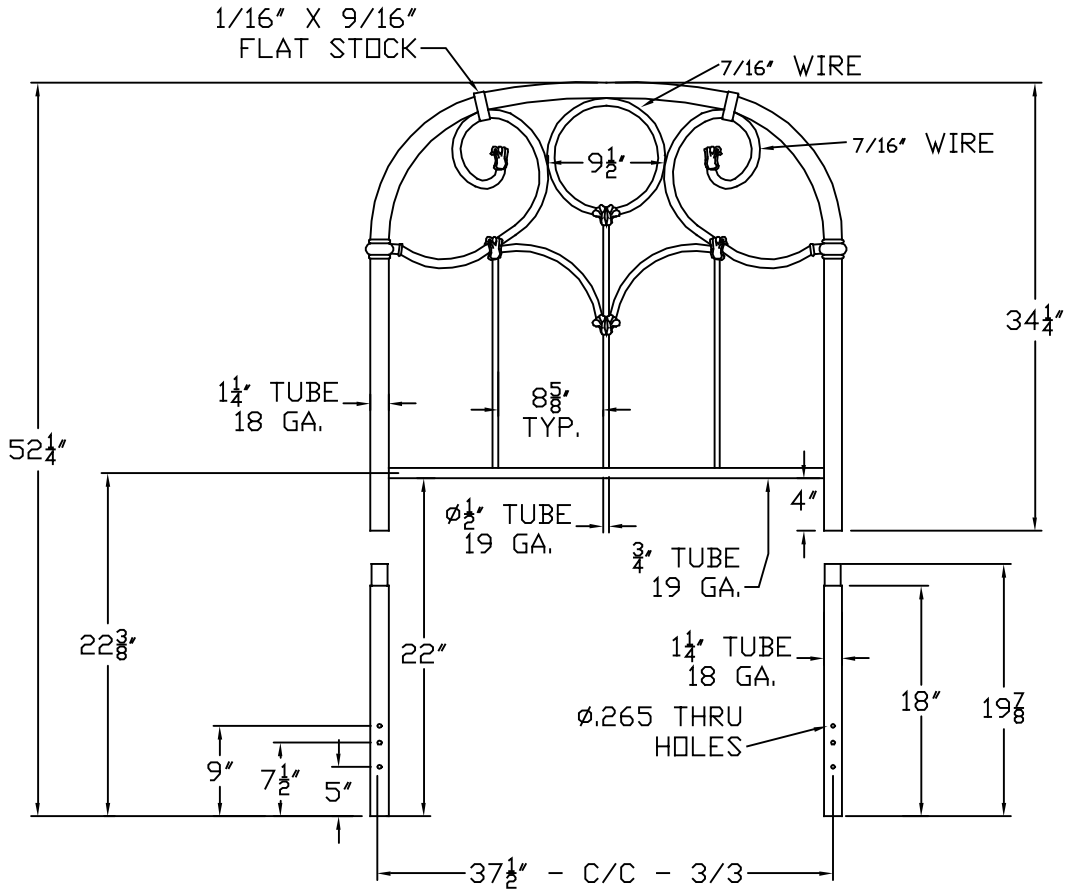

USE THIS AS REFERENCE ONLY

#	DESCRIPTION
—	HARDWARE BAG #352301 BED (BLACK)
—	(4) 1/4-20 2 COUNTERSUNK ALLEN HEAD SCREW
—	(4) 1/4-20 1 FLAT ALLEN HEAD SCREW
—	(8) 5/8" OD METAL WASHER
—	(4) 1/4-20 HEX NUT
—	ALLEN WRENCH
—	—
—	HARDWARE BAG #352302 HEADBOARD (BLACK)
—	(4) 1/4-20 2 COUNTERSUNK ALLEN HEAD SCREW
—	(4) 5/8" OD METAL WASHER
—	(4) 1/4-20 HEX NUT
—	ALLEN WRENCH
—	—
—	—
—	PLASTIC GLIDE #150940000
—	LEG EXT. #352805
—	—
—	—
—	—
—	—
—	—
—	—
—	—

ISU	DATE	REVISION
B	01-04-07	ADD CARTON INFORMATION
-	-	-
-	-	-
-	-	-

HEIGHT			WIDTH		DEPTH	WEIGHT (LBS.)				# OF CTNS		CARTON DIM'S		CU FT.		U.P.S.	
						PACKED		UNPACKED									
SIZE	FTBD	HDBD	FTBD	HDBD	D-BED	BED	HB	BED	-	BED	HB	BED	HEADBOARD	BED	HDBD	Y	N
3/3	36	52 1/4	39 3/4	39 3/4	-	20	-	-	-	1	1	-	42 1/2 X 37 X 3	-	2.70	-	X
4/6	-	-	-	-	-	-	-	-	-	-	-	-	-	-	-	-	-
5/0	-	-	-	-	-	-	-	-	-	-	-	-	-	-	-	-	-
6/6	-	-	-	-	-	-	-	-	-	-	-	-	-	-	-	-	-
-	-	-	-	-	-	-	-	-	-	-	-	-	-	-	-	-	-
-	-	-	-	-	-	-	-	-	-	-	-	-	-	-	-	-	-